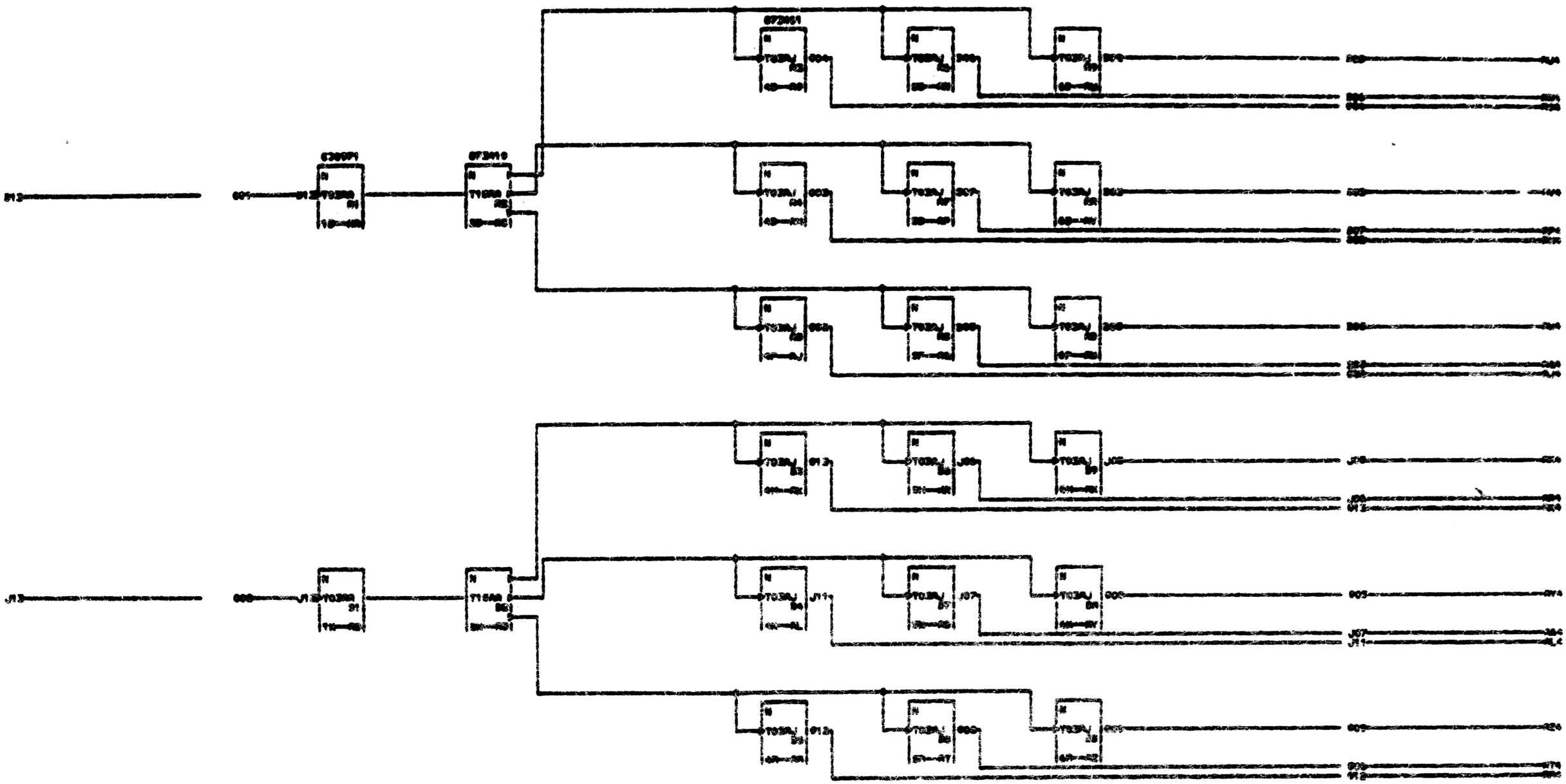

RESTRICTED

09-20-63
62-0244 30577

DATE	
LOG	135