STANDARDS CODE	CIRCUIT AND PACKAGING STANDARD		SYM	DATE	CHANGE NO.	TECH APPRO	SYM	DATE	CHANGE NO.	TECH APPRO	DEVELOPMENT NO.	Q/M
2-7045				12-13-63	DEV2358							
CARD CODE	APPROVAL	DATE		2/14/64	161189						5804147	
4147												

SHEET 10 OF 10

RESTRICTED

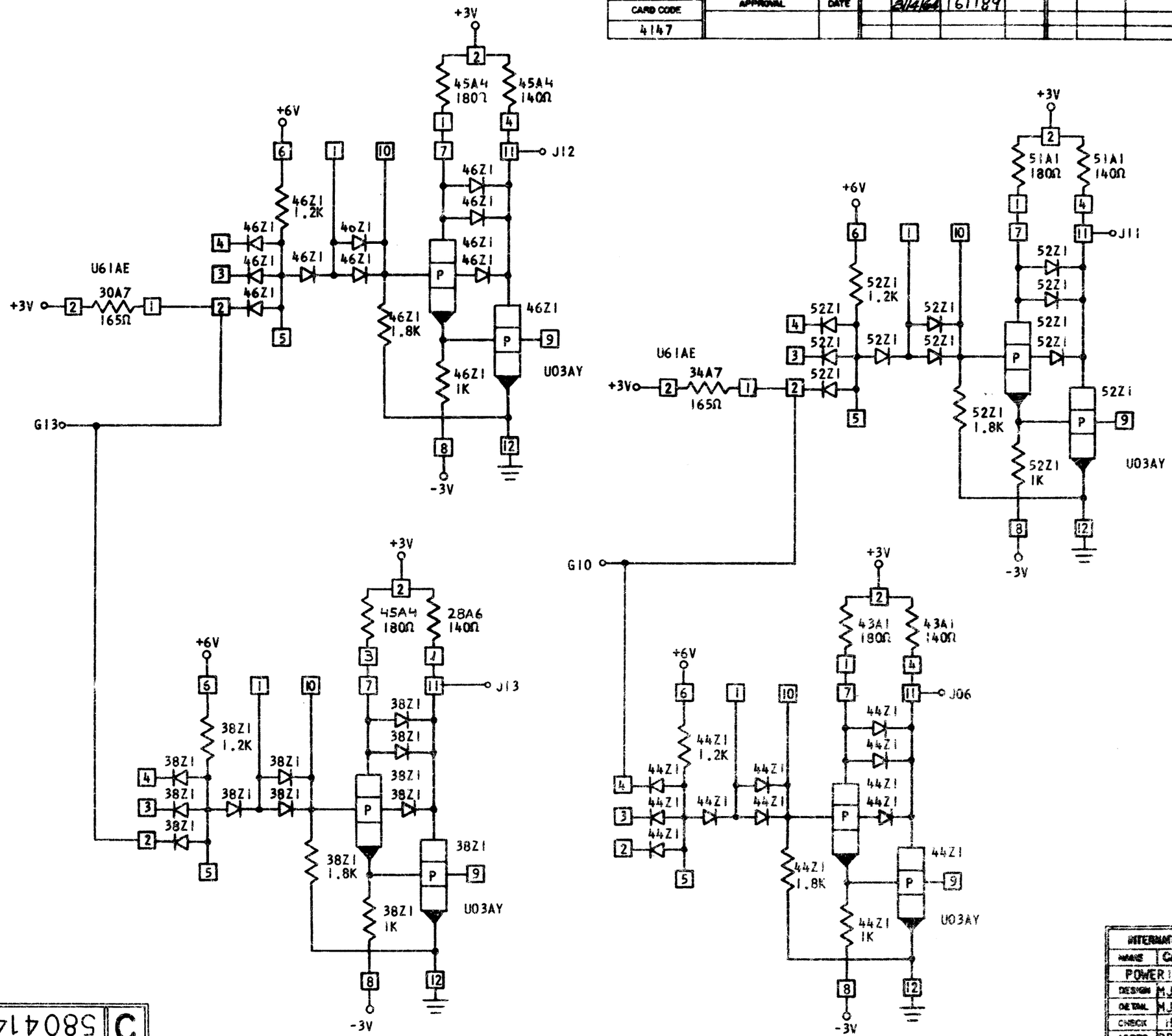

INTERNATIONAL BUSINESS MACHINES CORP				
NAME	CARD ASM — EXP ADDER			
POWERING				
DESIGN	MJG	9-11-63	TYPE	2070
DETAIL	MJG	9-11-63	SCALE	NONE
CHECK	HF	9-26-63	DRAW	VE 9-11-63
APPRO	RBS	12-13-63	CHECK	GM 9-21-64

C 5804147