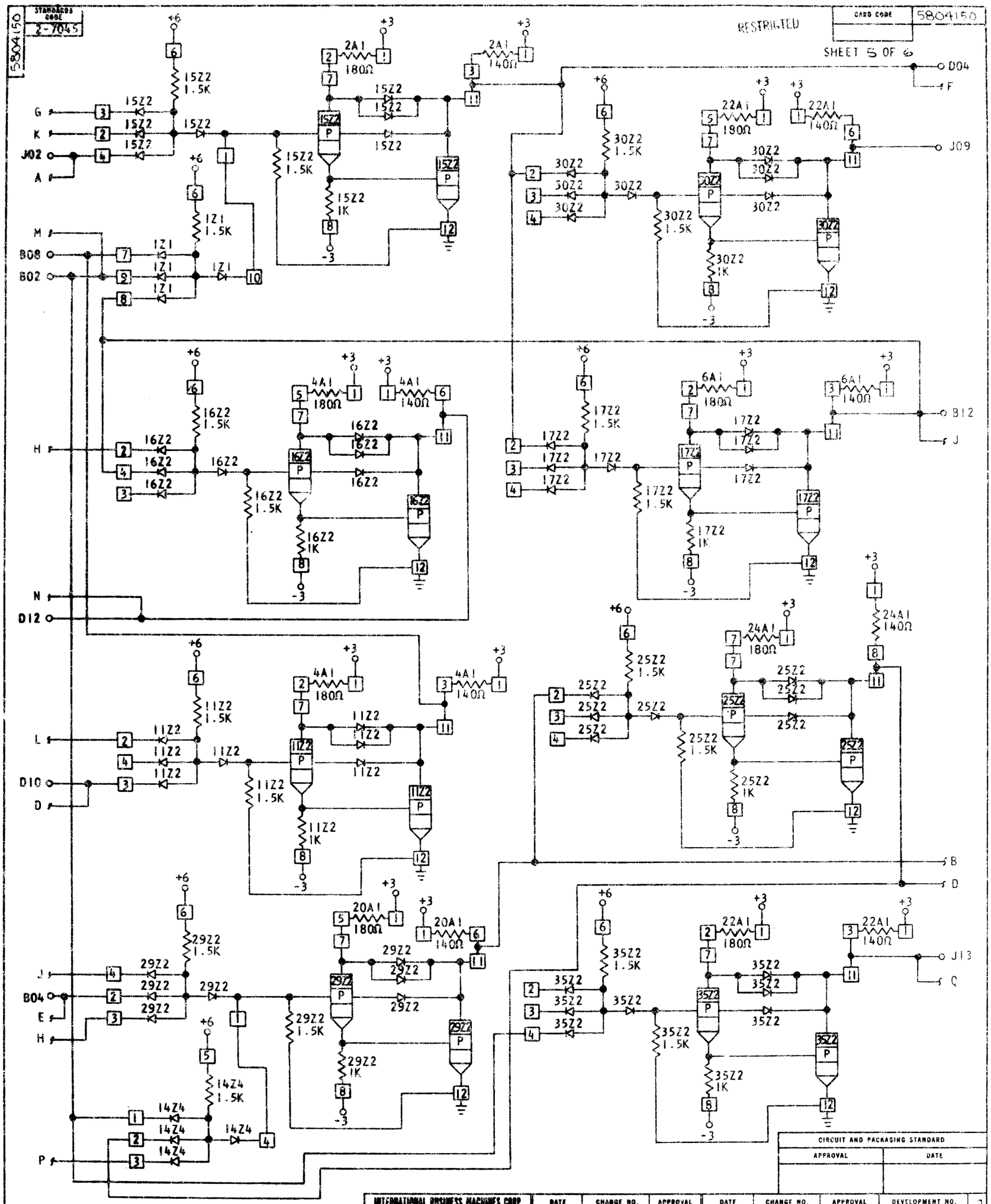
STANDARDS CODE
2-7045
5804150
RESTRICTED
CARD CODE
5804150
SHEET 5 OF 6
G
K
J02
A
M
B08
B02
H
N
D12
L
D10
D
J
B04
E
H
P
D04
F
J09
B12
J
B
D
J13
Q
C
INTERNATIONAL BUSINESS MACHINES CORP.
NAME 15 N/SEC CLOCK
DESIGN
DETAIL
CHECK
APPRO
MODEL
SCALE NONE
DRAWN
CHECK
DATE
CHANGE NO.
APPROVAL
DEV 3190
161505
DEVELOPMENT NO.
SE146
CIRCUIT AND PACKAGING STANDARD
APPROVAL
DATE