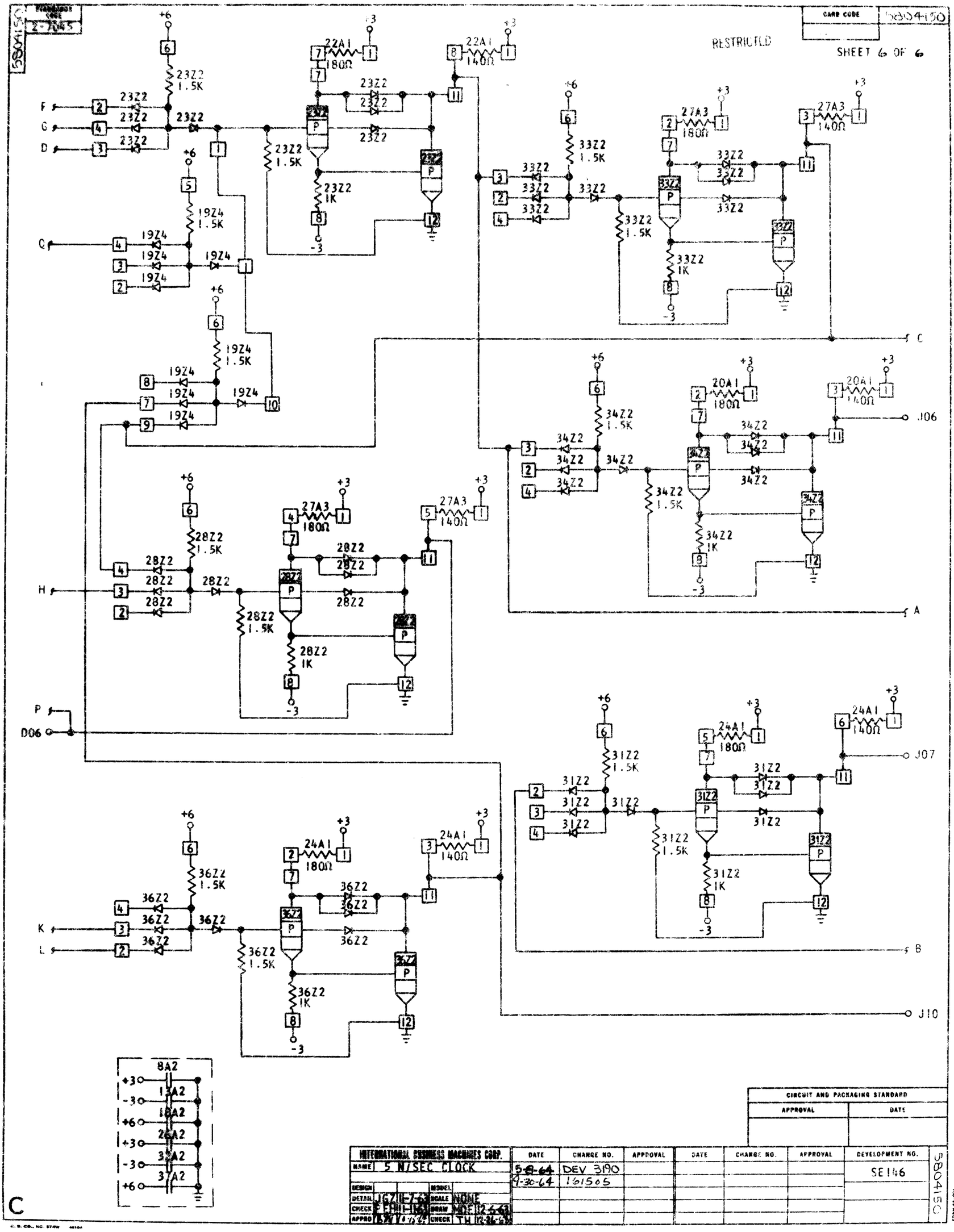
RESTRICTED
SHEET 6 OF 6
5804150
F
G
D
C
H
P
D06
K
L
A
B
J06
J07
J10
23Z2
19Z4
28Z2
33Z2
34Z2
36Z2
31Z2
22A1
27A3
20A1
24A1
180Ω
140Ω
1.5K
1K
8A2
CIRCUIT AND PACKAGING STANDARD
APPROVAL
DATE
INTERNATIONAL BUSINESS MACHINES CORP.
NAME 5 N/SEC CLOCK
DEVELOPMENT NO. SE146
CHANGE NO. DEV 3190
161505
MODEL
SCALE NONE
DRAW MDF 12-6-63
CHECK TH 12-26-63
DETAIL JGZ 11-7-63
CHECK EHH 11-16-63
APPRO
C