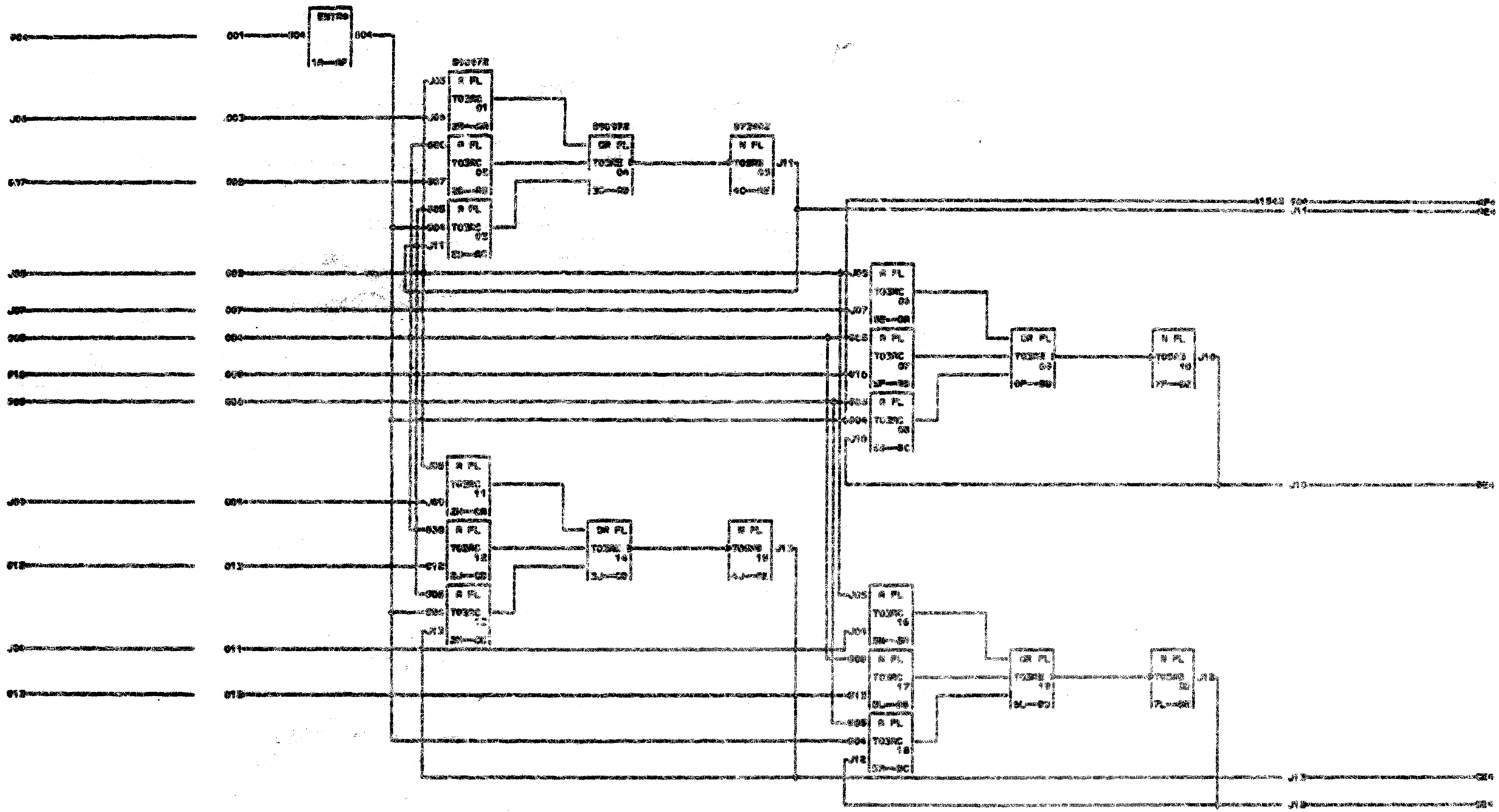

RESTRICTED

DOUBLE SET LATCH

SHEET 1 OF 2