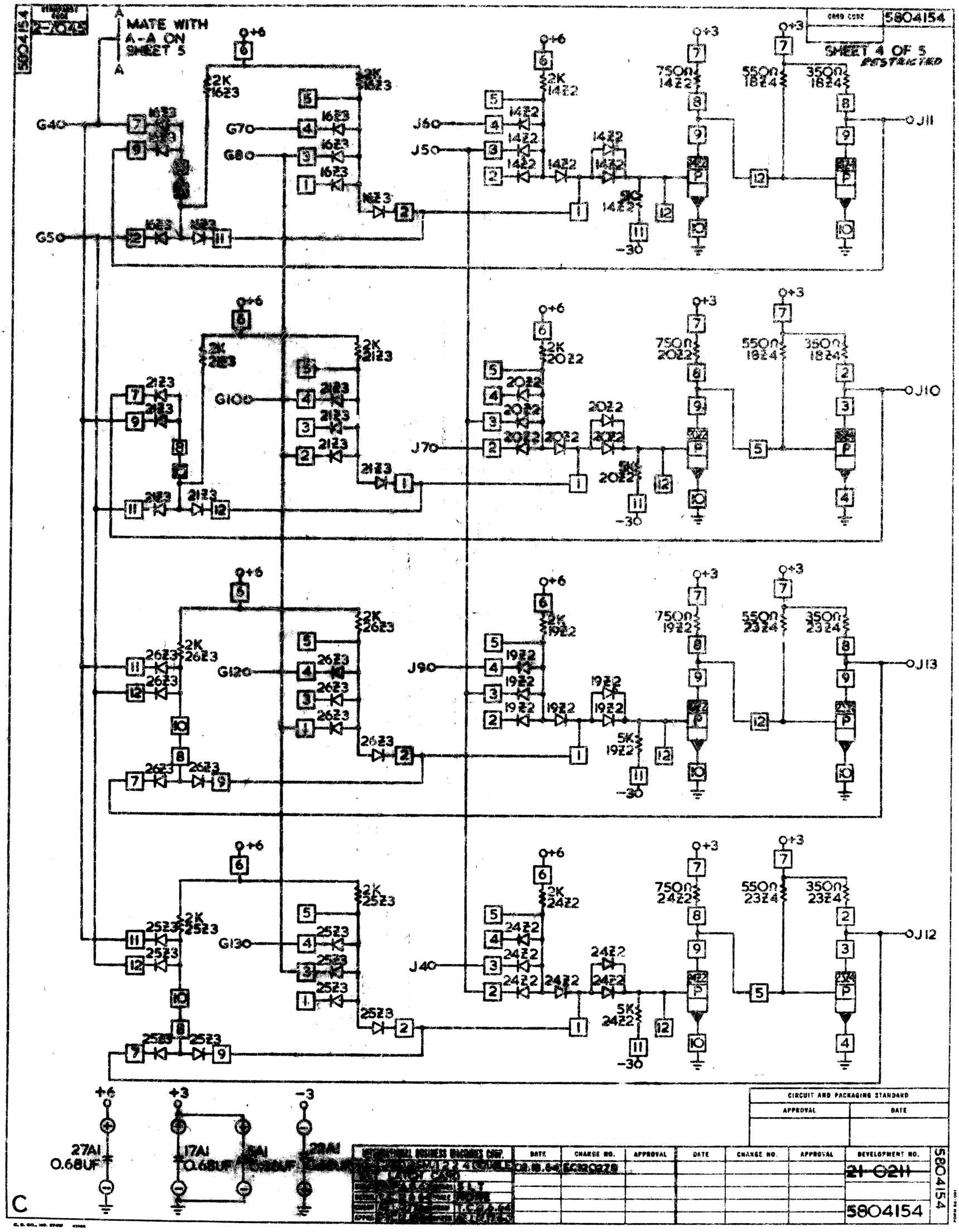
5804154
MATE WITH A-A ON SHEET 5
SHEET 4 OF 5
RESTRICTED
G40
G50
G70
G80
G100
G120
G130
J60
J50
J70
J90
J40
J11
J10
J13
J12
+6
+3
-30
2K 1623
2K 1422
7500 1422
5500 1824
3500 1824
2K 2123
2K 2022
7500 2022
2K 2623
2K 1922
7500 1922
5500 2324
3500 2324
2K 2523
2K 2422
7500 2422
5500 2324
3500 2324
5K 1422
5K 2022
5K 1922
5K 2422
+6
+3
-3
27A1
0.68UF
17A1
0.68UF
CIRCUIT AND PACKAGING STANDARD
APPROVAL
DATE
DATE
CHANGE NO.
APPROVAL
DEVELOPMENT NO.
21-0211
5804154
C