FORM 2-7045-6 (6-63)

STANDARDS CODE	CIRCUIT AND PACKAGING STANDARD		SYM	DATE	CHANGE NO.	TECH APPRO	SYM	DATE	CHANGE NO.	TECH APPRO	DEVELOPMENT NO.	Q/M
2-7045	APPROVAL	DATE		12-31-63	DEV2381							
CARD CODE				8-10-64	161190						5804164	
4164												

SHEET 7 OF 9

RESTRICTED

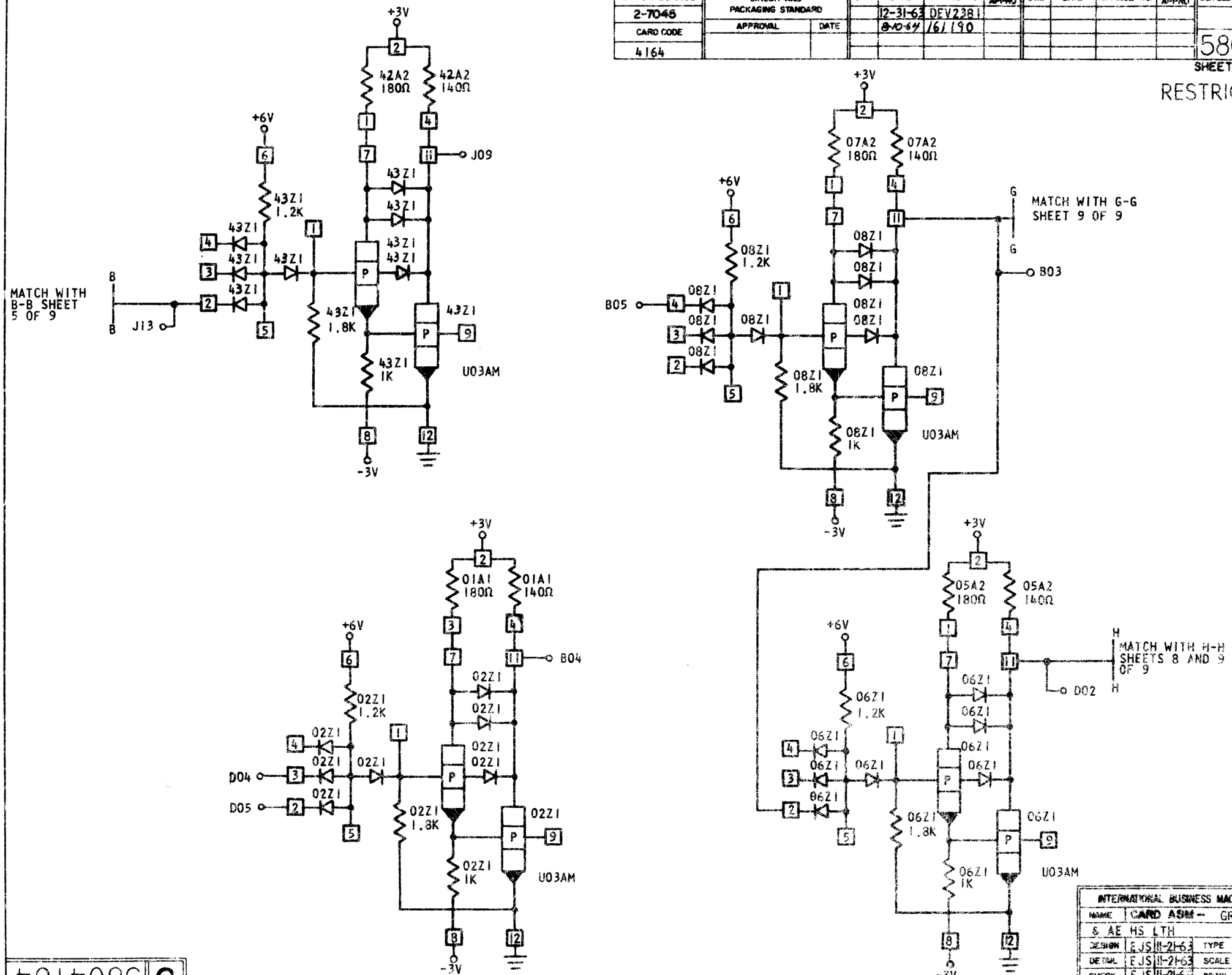

INTERNATIONAL BUSINESS MACHINES CORP					
NAME	CARD ASM -- GROUP CARRY & AE HS LTH				
DESIGN	EJS	11-21-63	TYPE	2070	
DETAIL	EJS	11-21-63	SCALE	NONE	
CHECK	EJS	11-21-63	DRAW	VF	9-4-64
APPRO	RBS	12-31-63	CHECK	DLH	9-21-64

C 5804164