STANDARD CODE	CIRCUIT AND PROCESS STANDARD		SYM	DATE	CHANGE NO		SYM	DATE	CHANGE NO		DEVELOPMENT NO.	G/M
2-7048	APPROVAL	DATE		2-21-64	DEK2955							
CARD CODE				5-6-64	160436						5804168	
4168												

RESTRICTED

SHEET 6 OF 8

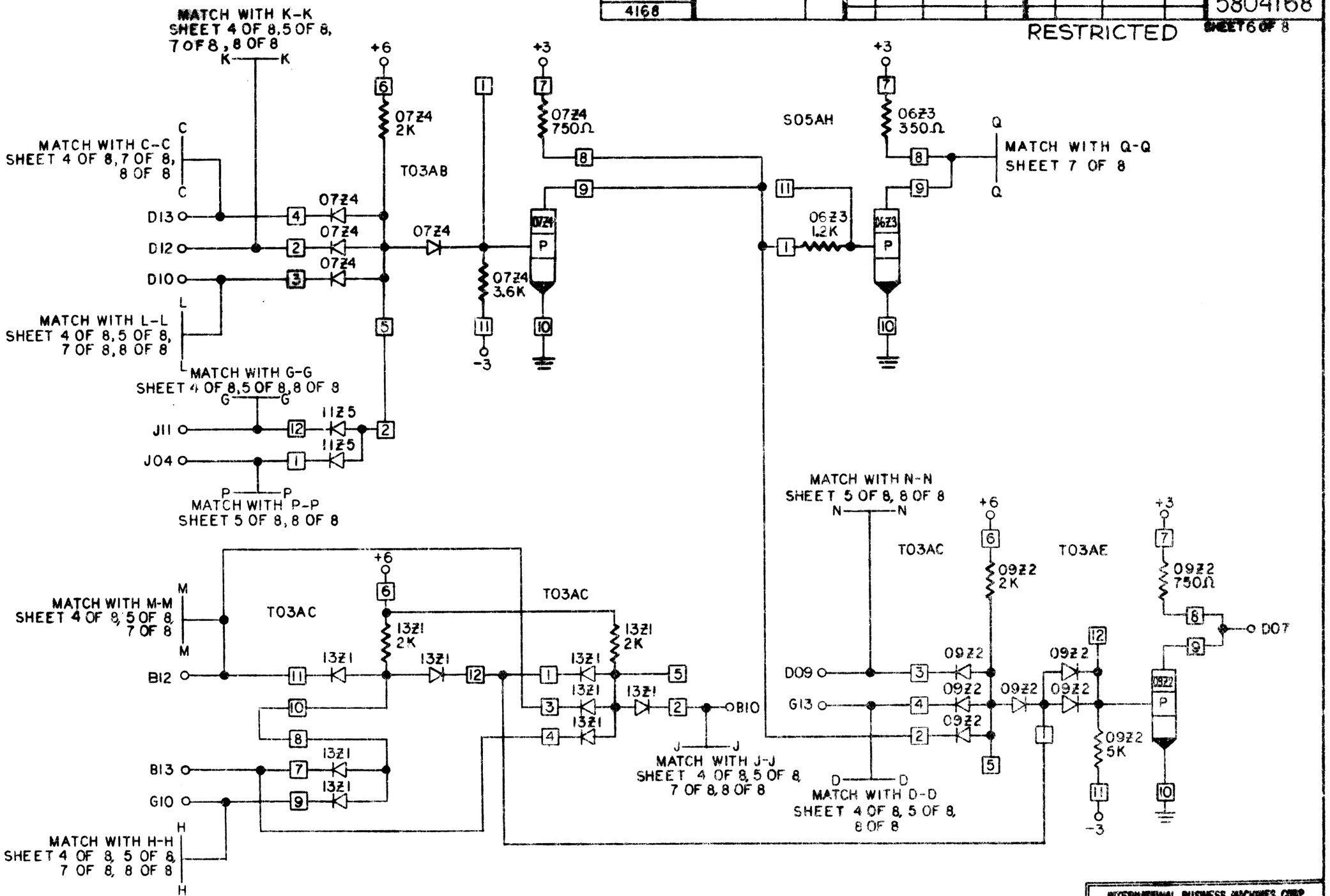

INTERNATIONAL BUSINESS MACHINES CORP				
NAME	CARD ASM-TRANSLATOR 8-BIT CODE TO TILT ROTATE			
DESIGN	C&D	12-31-63	TYPE	2150
DETAIL	C&D	12-31-63	SCALE	NONE
CHECK	C&D	12-31-63	DRAW	
APPRO	GHM	2-14-64	CHECK	GSB 1-22-64

C 5804168