FORM 2-7045-8 (8-63)

STANDARDS CODE	CIRCUIT AND PACKAGING STANDARD		SYM	DATE	CHANGE NO.	TECH APPRO	SYM	DATE	CHANGE NO.	TECH APPRO	DEVELOPMENT NO.	G/M
2-7045	APPROVAL	DATE		3-24-64	DEV 1984							
CARD CODE				9-14-64	161496						5804176	
4176												

SHEET 8 OF 9

RESTRICTED

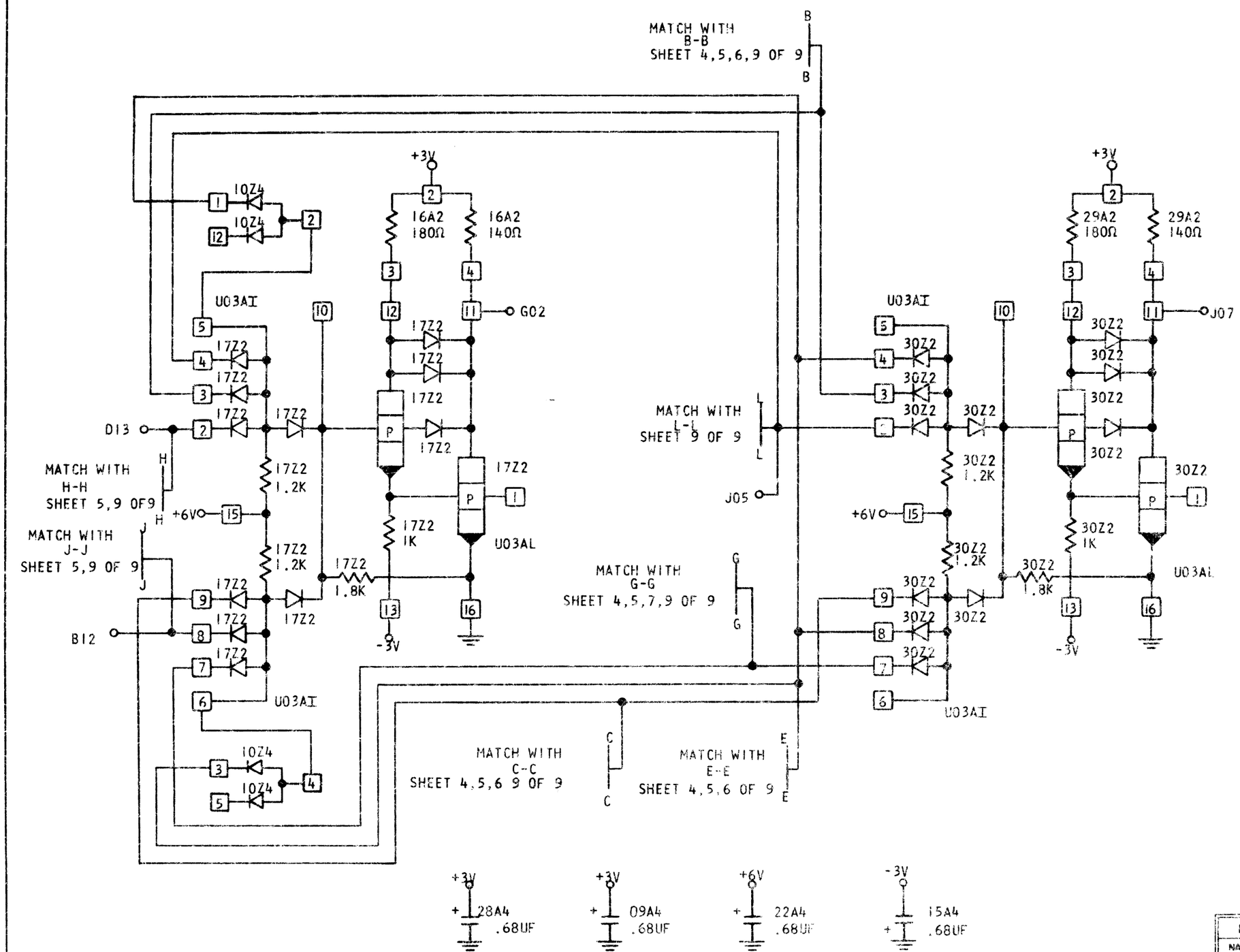

INTERNATIONAL BUSINESS MACHINES CORP				
NAME	CARD ASM — M			
	ZERO DETECT			
DESIGN	TDT	2-10-64	TYPE	2070
DETAIL	TDT	2-10-64	SCALE	NONE
CHECK	JDB	2-12-64	DRAW	VE 8-23-64
APPRO	[illegible]	[illegible]	CHECK	RS 9-22-64

C 5804176