FORM 2-7045-6 (1-63)

STANDARDS CODE	CIRCUIT AND PACKAGING STANDARD		SYM	DATE	CHANGE NO.	TECH APPRO	SYM	DATE	CHANGE NO.	TECH APPRO	DEVELOPMENT NO.	Q/M
2-7045				4-17-64	DEV. 3116						5116121	
CARD CODE	APPROVAL	DATE		9/29/64	161566						5804182	
4182												

SHEET 5 OF 10

RESTRICTED

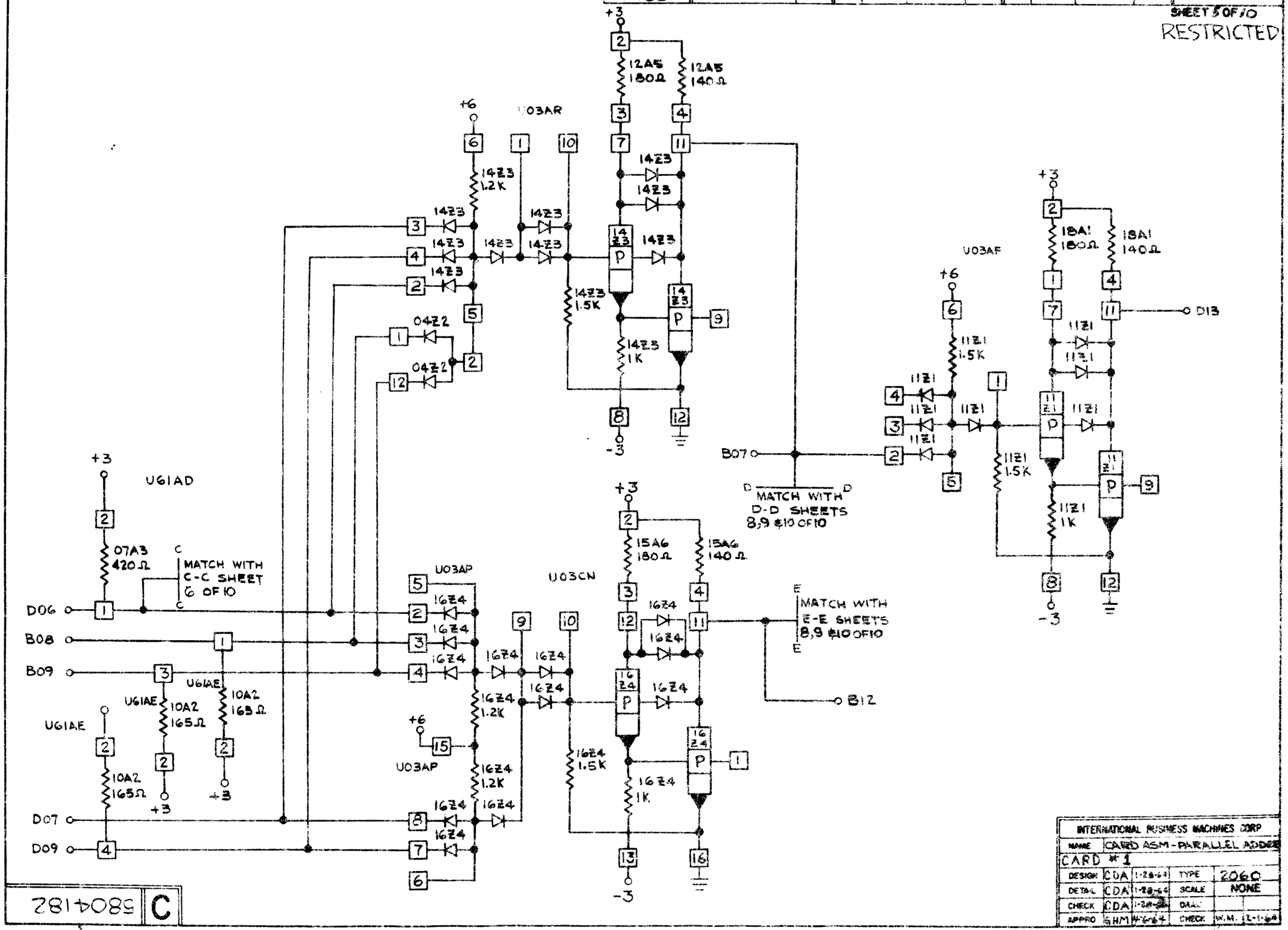

INTERNATIONAL BUSINESS MACHINES CORP				
NAME	CARD ASM - PARALLEL ADDER			
CARD #1				
DESIGN	CDA	1-28-64	TYPE	2060
DETAIL	CDA	1-28-64	SCALE	NONE
CHECK	CDA	1-28-64	DRAW	
APPRO	GHM	1-6-64	CHECK	W.M. 12-1-64

C 5804182