FORM 2-7045-6 (1-63)

STANDARDS CODE	CIRCUIT AND PACKAGING STANDARD		SYM	DATE	CHANGE NO.	TECH APPRO	SYM	DATE	CHANGE NO.	TECH APPRO	DEVELOPMENT NO.	Q/M
2-7045	APPROVAL	DATE		10-12-64	160977			26APR67	169736 E		5116066	
CARD CODE	G.H.M.	7-15-64		26-65	162280						5804192	
4192				6-2-65	164601 C							
				11NOV65	165602 D							

SHEET 3 OF 3

RESTRICTED

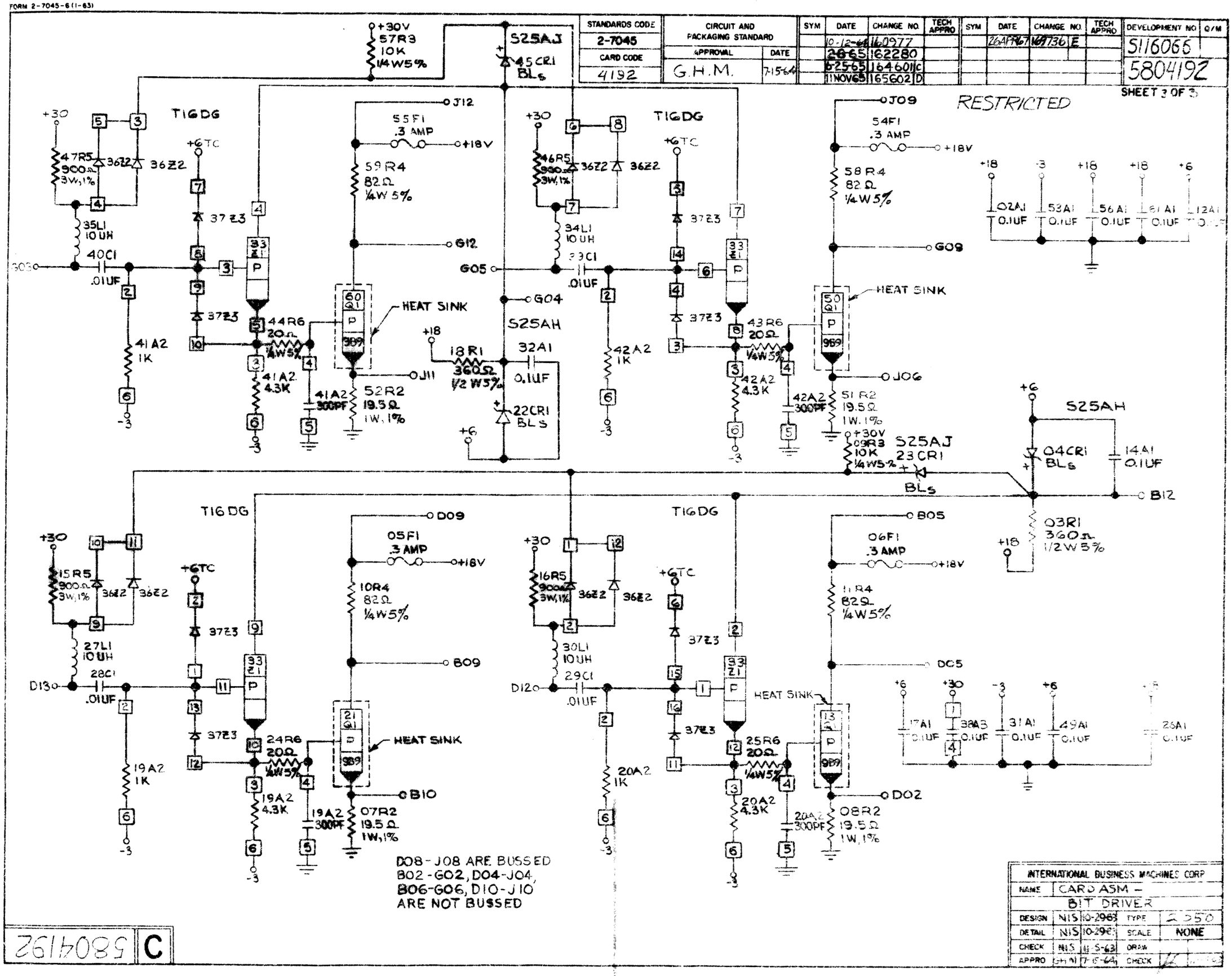

D08-J08 ARE BUSSED
B02-G02, D04-J04,
B06-G06, D10-J10
ARE NOT BUSSED

INTERNATIONAL BUSINESS MACHINES CORP				
NAME	CARD ASM - BIT DRIVER			
DESIGN	NIS	10-29-63	TYPE	2250
DETAIL	NIS	10-29-63	SCALE	NONE
CHECK	NIS	11-5-63	DRAW	
APPRO	GHM	7-15-64	CHECK	

5804192 C