STANDARDS CODE	CIRCUIT AND PACKAGING STANDARD		SYM	DATE	CHANGE NO.	TECH APPRO	SYM	DATE	CHANGE NO.	TECH APPRO	DEVELOPMENT NO.	G/M
2-7046	APPROVAL	DATE		6-25-64	DEV 3141							
CARD CODE				9-8-64	16 167						5804194	
4194												

RESTRICTED

SHEET 6 OF 6.

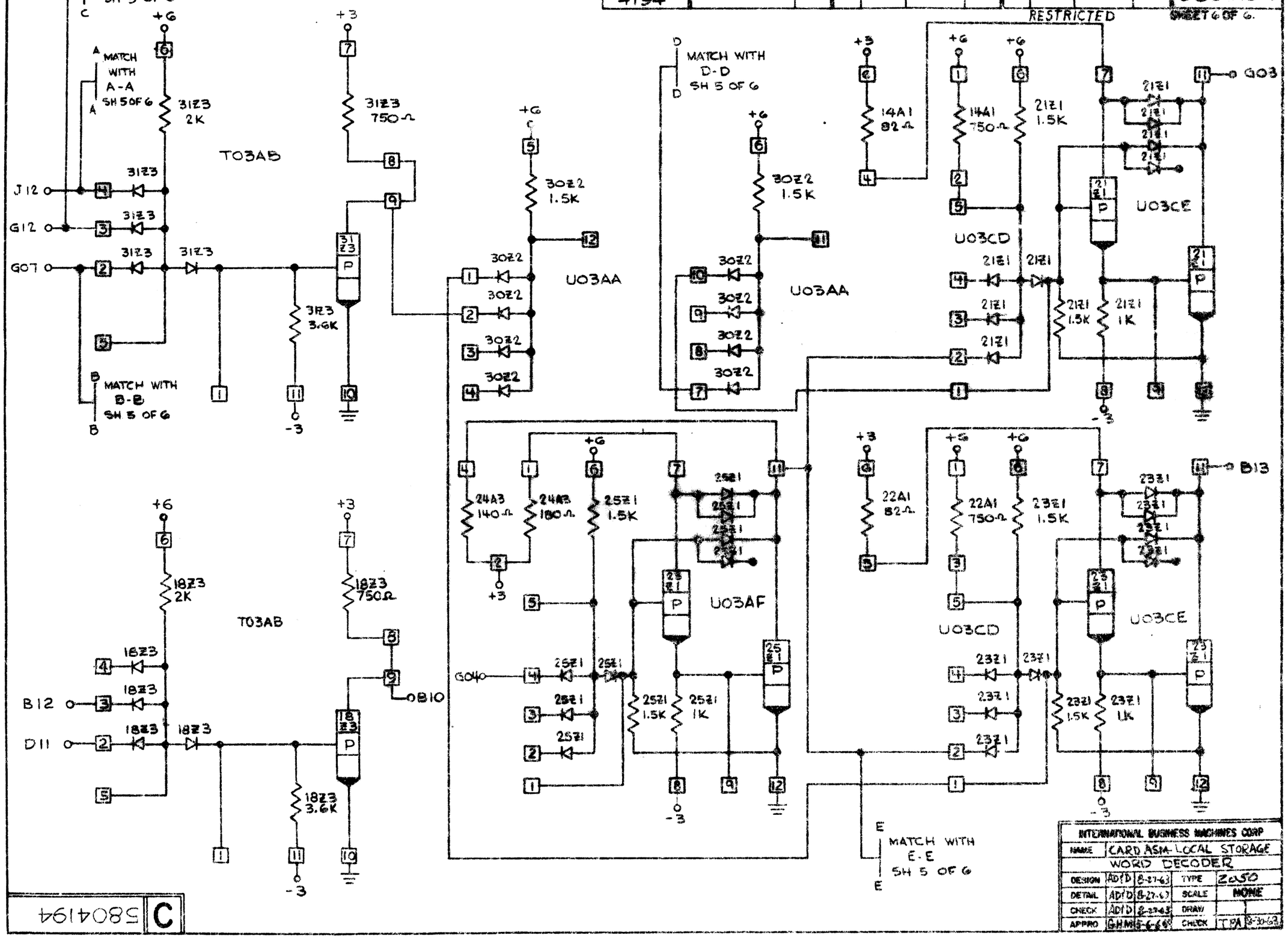

INTERNATIONAL BUSINESS MACHINES CORP				
NAME	CARD ASM-LOCAL STORAGE WORD DECODER			
DESIGN	ADID	8-27-63	TYPE	2050
DETAIL	ADID	8-27-63	SCALE	NONE
CHECK	ADID	8-27-63	DRAW	
APPRO	GHM	8-6-63	CHECK	TPA 8-30-63

C 5804194