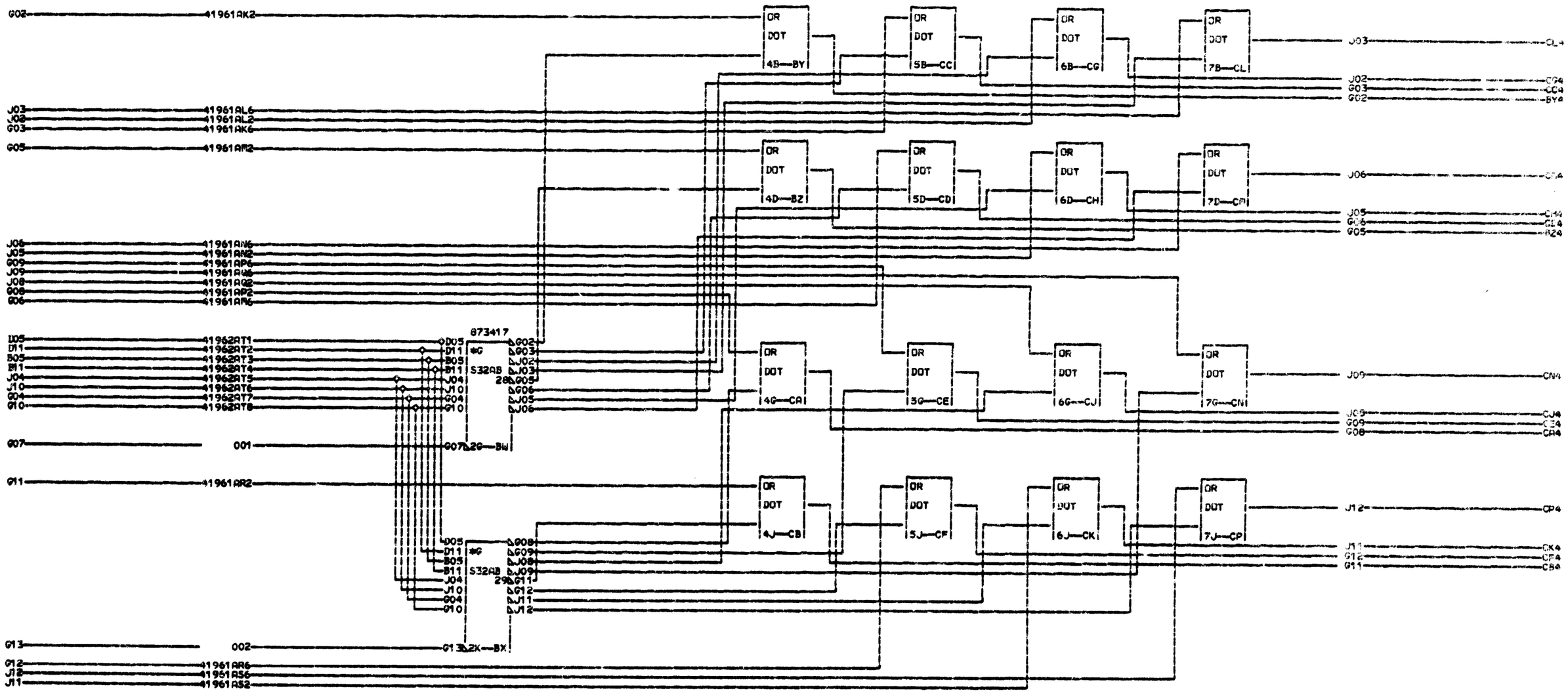

05-12-64	160500
05-04-65	163827 B
04-22-66	167700 C
06-10-66	167726 D
08-30-67	166605 E
09-15-67	166612 F

GATE CARD WITH CLAMPS

DATE 09-20-67 RACH. ASSEMBLY

LOG FRAME 63

CD PG 3 OF 3 P.N. 5804196

IBM CORP. CR JLK. CS

4 1 9 6 3 000