STANDARDS CODE	CIRCUIT AND PACKAGING STANDARD		SYM	DATE	CHANGE NO	TECH APPRO	SYM	DATE	CHANGE NO	TECH APPRO	DEVELOPMENT NO	Q/M
2-7045				4-8-64	DEV 2906							
CARD CODE	APPROVAL	DATE		5-18-65	163488 A						5804215	
4215				4-7-66	167162B							

SHEET 3 OF 3

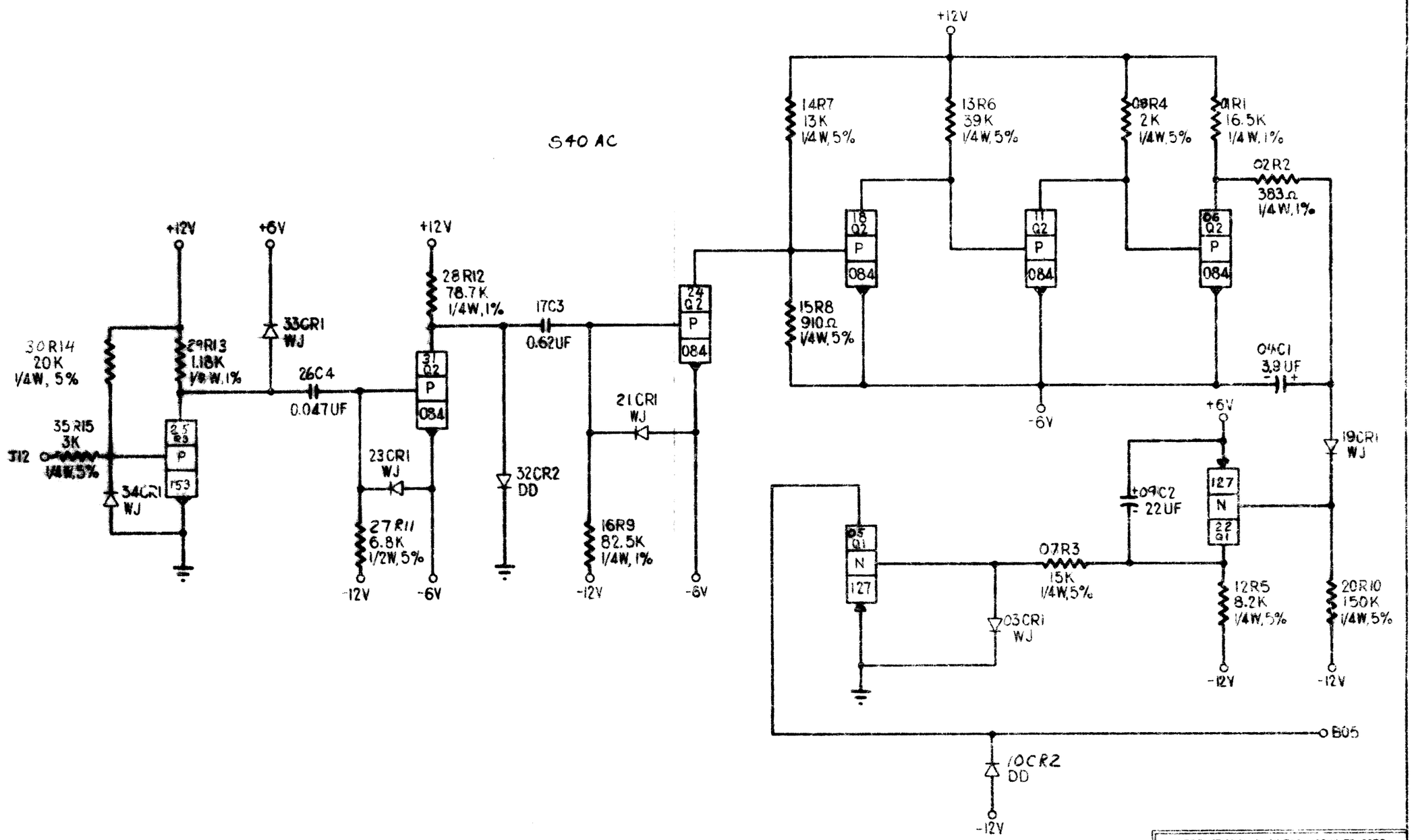

INTERNATIONAL BUSINESS MACHINES CORP				
NAME	CARD ASM — SPEED DETECTOR DRIVER			
DESIGN	MFR	11-1-63	TYPE	2301
DETAIL		11-5-63	SCALE	NONE
CHECK		4-8-64	DRAW	
APPRO		5-6-64	CHECK	

5804215 C