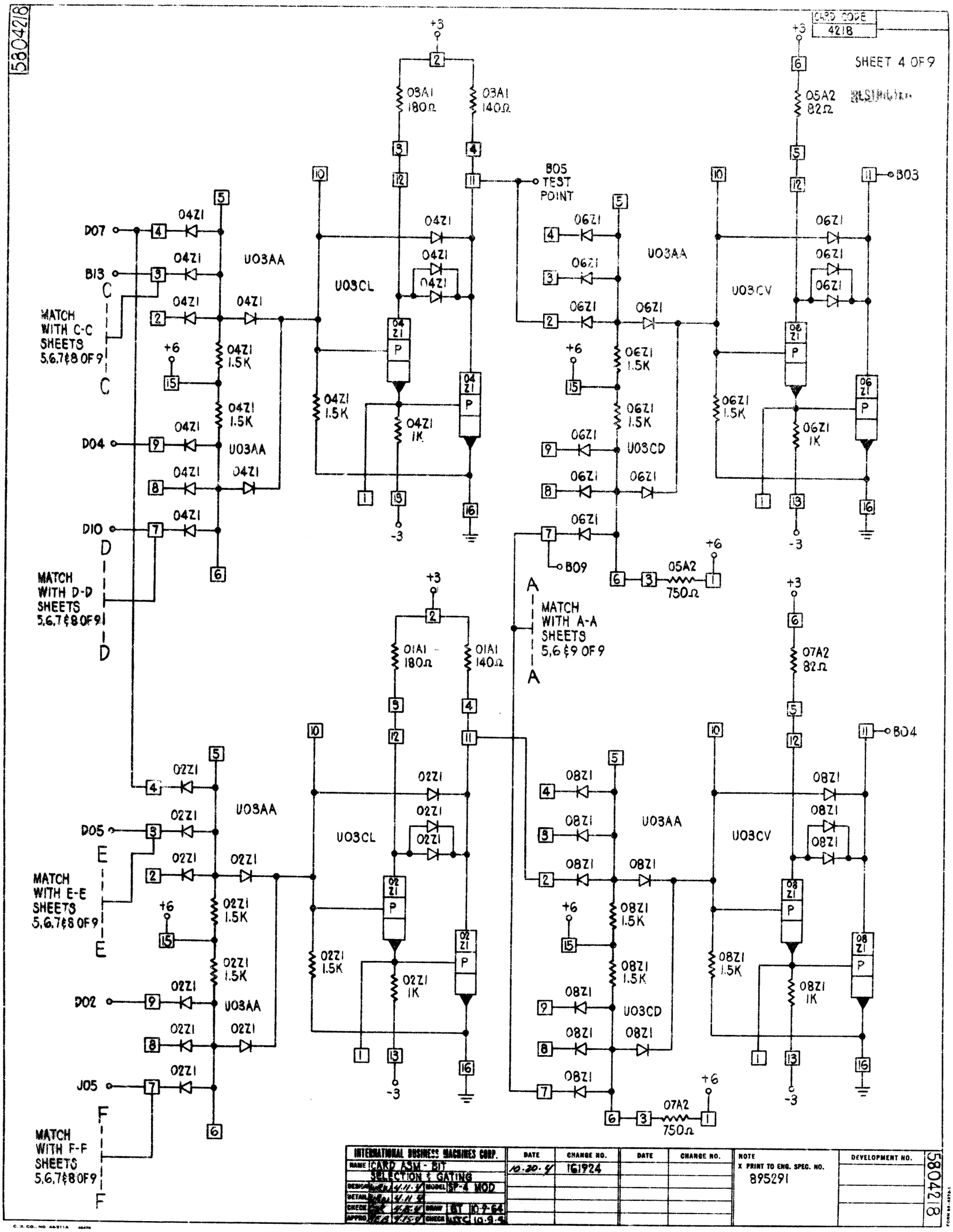
5804218
CARD CODE 4218
SHEET 4 OF 9
+3
03A1 180Ω
03A1 140Ω
05A2 82Ω
B05 TEST POINT
B03
B04
B09
D07
B13
D04
D10
D05
D02
J05
04Z1
06Z1
02Z1
08Z1
U03AA
U03CL
U03CV
U03CD
04Z1 1.5K
06Z1 1.5K
02Z1 1.5K
08Z1 1.5K
04Z1 1K
06Z1 1K
02Z1 1K
08Z1 1K
+6
-3
05A2 750Ω
07A2 82Ω
07A2 750Ω
01A1 180Ω
01A1 140Ω
MATCH WITH C-C SHEETS 5,6,7&8 OF 9
MATCH WITH D-D SHEETS 5,6,7&8 OF 9
MATCH WITH A-A SHEETS 5,6&9 OF 9
MATCH WITH E-E SHEETS 5,6,7&8 OF 9
MATCH WITH F-F SHEETS 5,6,7&8 OF 9
INTERNATIONAL BUSINESS MACHINES CORP.
NAME CARD ASM - BIT SELECTION & GATING
MODEL SP-4 MOD
DATE 10-20-64
CHANGE NO. 161924
NOTE X PRINT TO ENG. SPEC. NO. 895291
DEVELOPMENT NO.
580421 8