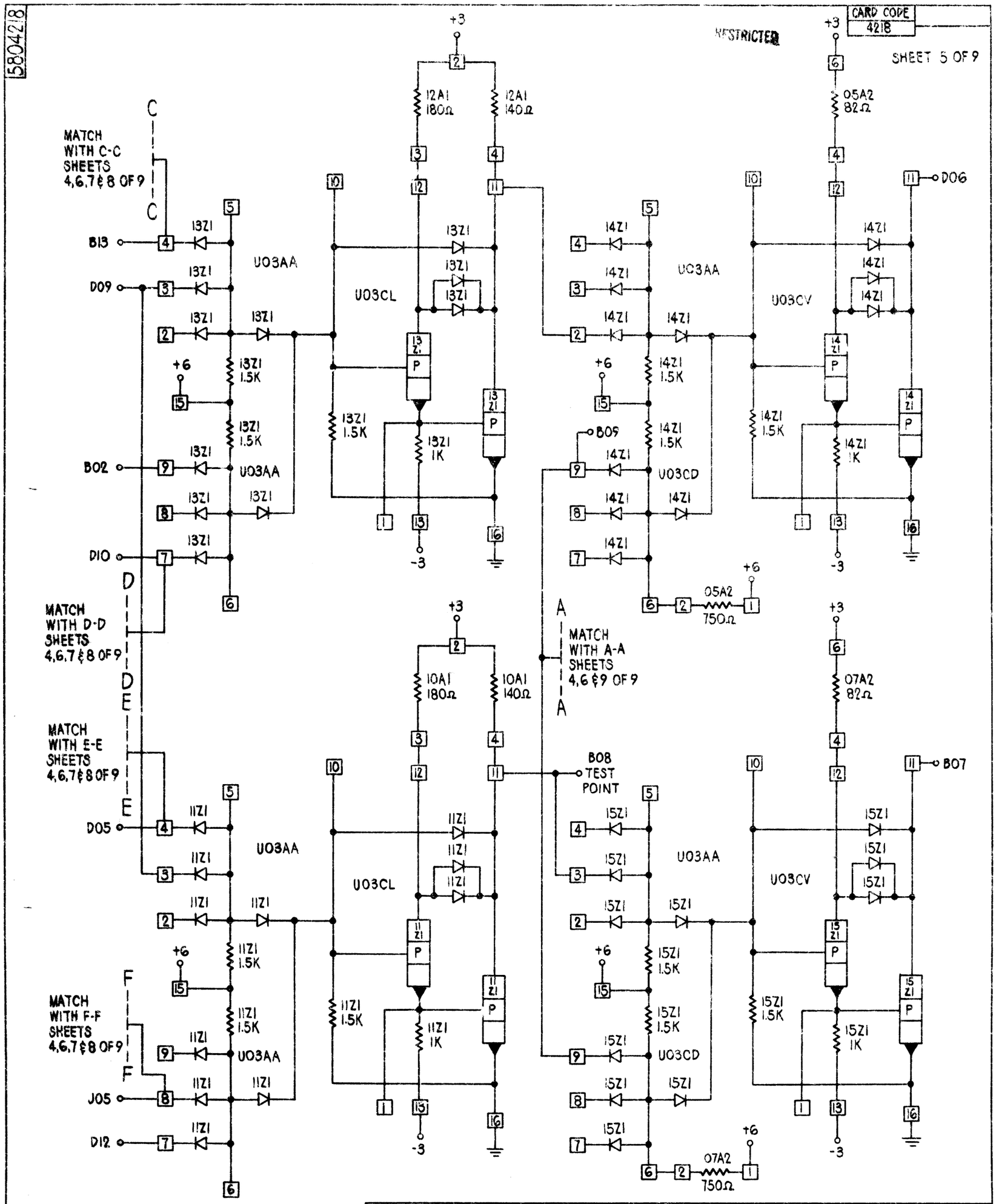

INTERNATIONAL BUSINESS MACHINES CORP.	DATE	CHANGE NO.	DATE	CHANGE NO.	NOTE	DEVELOPMENT NO.
NAME CARD ASM-BIT SELECTION & GATING	10-20-9	161924			X PRINT TO ENG. SPEC. NO. 895291	
DESIGN 4-11-9 MODEL SP-4 MOD						
DETAIL 4-11-9						
CHECK 4-15-9 DRAW GT 10-8-64						
APPRO 4-15-9 CHECK WJC 10-9-4						

580421B

C. B. CO., NO. 44-511A 48479

FORM 85-5279-1