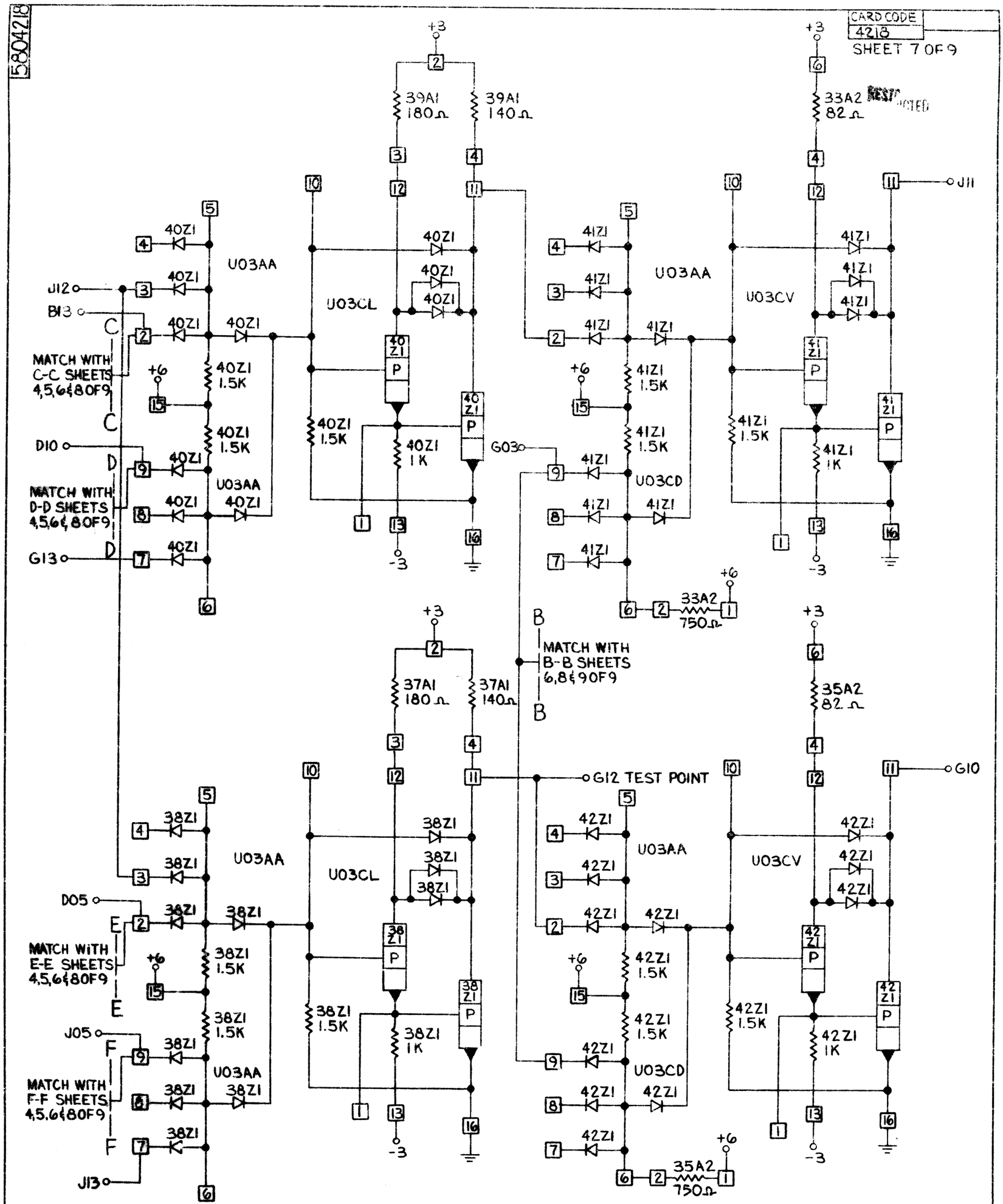


| INTERNATIONAL BUSINESS MACHINES CORP. | DATE | CHANGE NO. | DATE | CHANGE NO. | NOTE | DEVELOPMENT NO. |
|---|---|---|---|---|---|---|
| NAME CARD ASM - BIT SELECTION & GATING | 10-20-61 | 161924 | | | X PRINT TO ENG. SPEC. NO. 895291 | |
| DESIGN 4-11-61 MODEL SM & MOD | | | | | | |
| DETAIL 4-11-61 | | | | | | |
| CHECK 4-15-61 DRAWN GT 10-8-61 | | | | | | |
| APPRO 4-15-61 CHECK WTC 10-9-61 | | | | | | |

5804218

C. B. CO., NO. 44-811-A 40470

FORM 811-4270-1