5804218

CARD CODE 4218

SHEET 9 OF 9

RESTRICTED

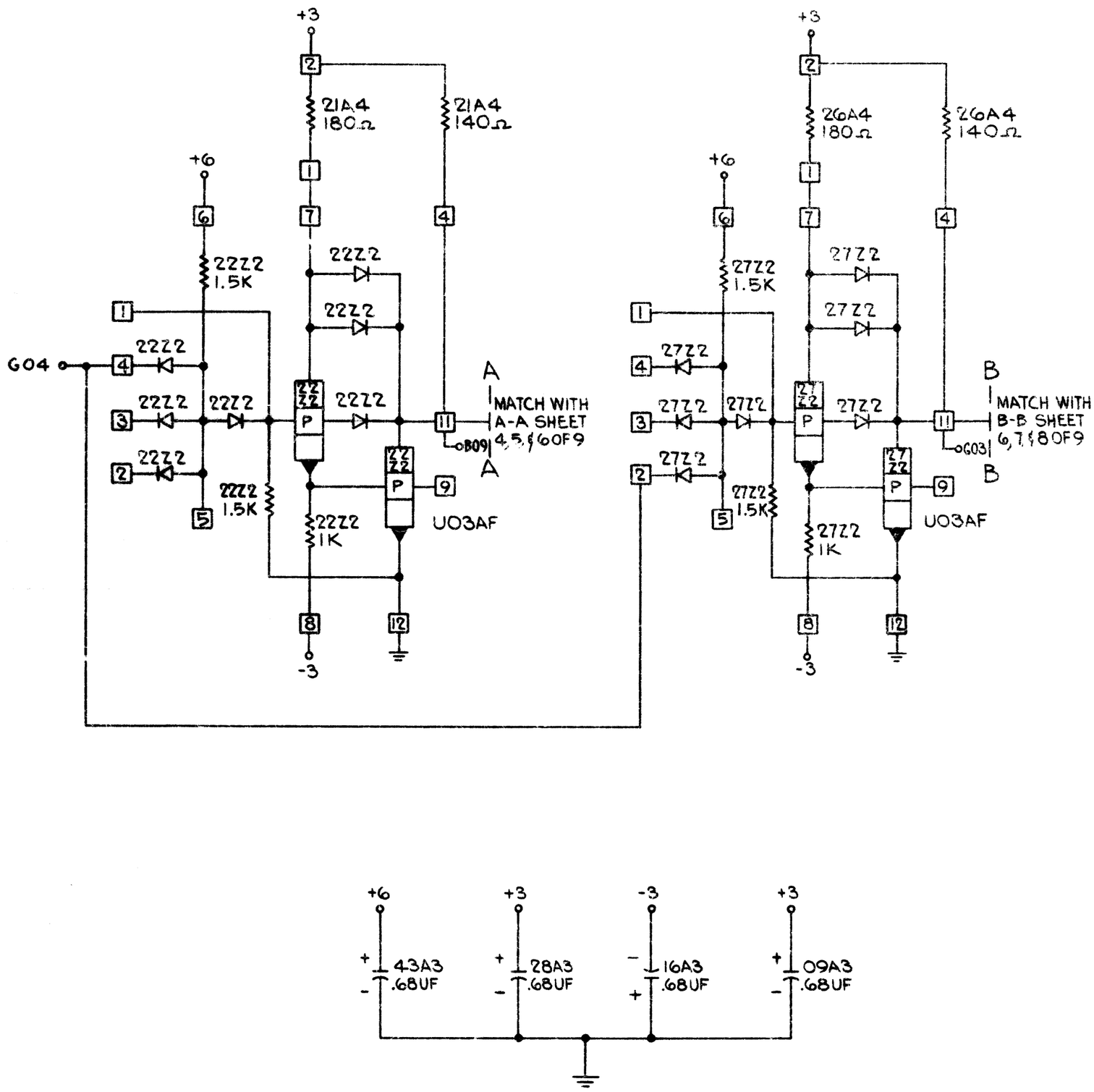

INTERNATIONAL BUSINESS MACHINES CORP.	DATE	CHANGE NO.	DATE	CHANGE NO.	NOTE	DEVELOPMENT NO.
NAME CARDASM-BT SELECTION & GATING	10-20-64	161924			X PRINT TO ENG. SPEC. NO. 895291	
DESIGN WRW 4-11-4 MODEL SP-4 MOD						
DETAIL 4-11-4						
CHECK 4/15/4 DRAW GT 10-9-64						
APPRO 4/15/4 CHECK WJC 10-9-4						

5804218

C. B. CO., NO. 44-811A 48470

FORM 88-5276-1