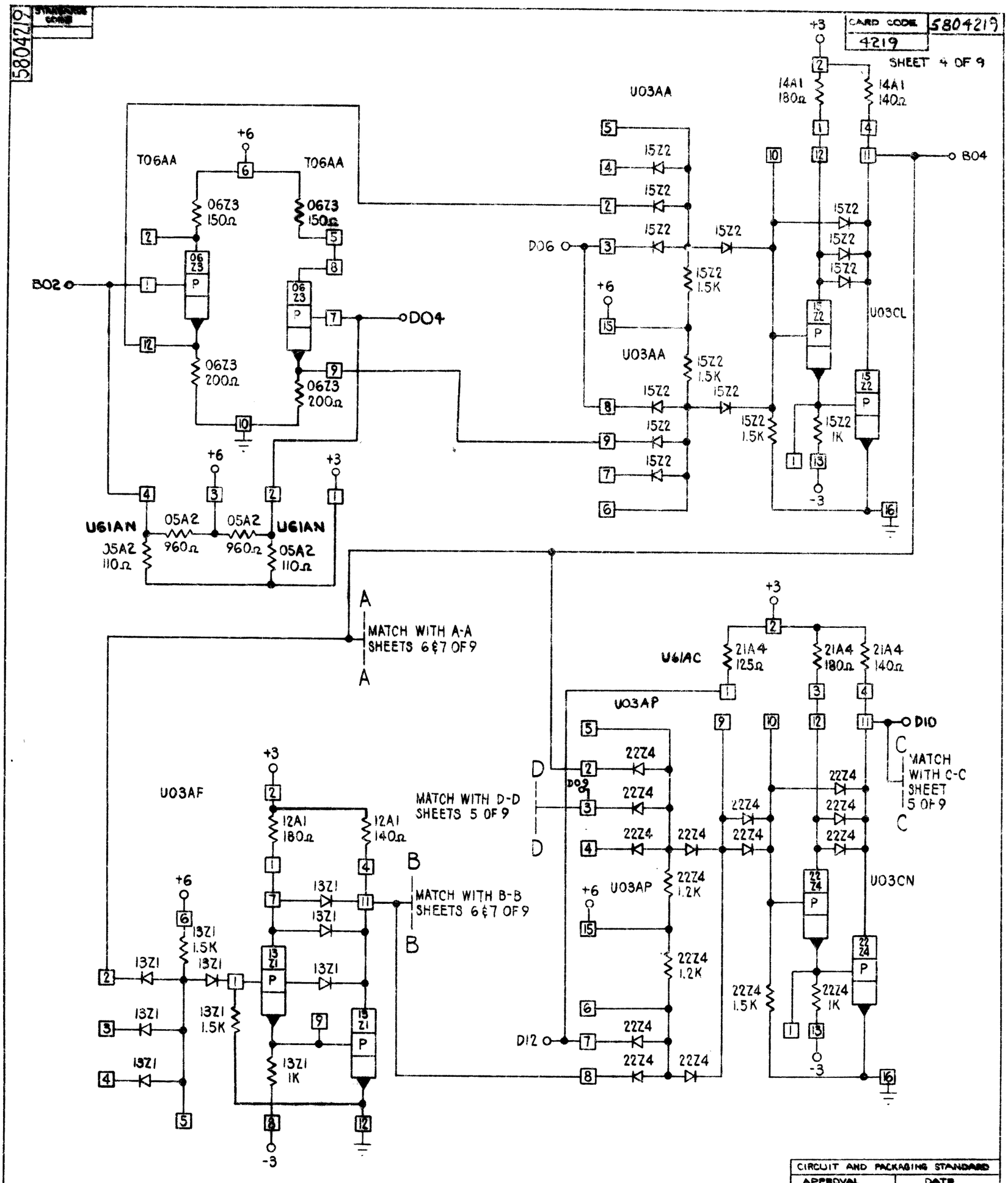

CIRCUIT AND PACKAGING STANDARD	
APPROVAL	DATE
LeBrunet	10-8-64

INTERNATIONAL BUSINESS MACHINES CORP.	DATE	CHANGE NO.	DATE	CHANGE NO.	NOTE	DEVELOPMENT NO.
NAME CARD ASSEMBLY-6 REGISTORS	10-22-64	167112	MFR		X PRINT TO ENG. SPEC. NO. 895291	
DESIGN GA43-2464 MODEL SD-6						
DETAIL GA43-2464						
CHECK 9-10-64 DRAW GT 4-7-64						
APPRO CHECK						

5804219