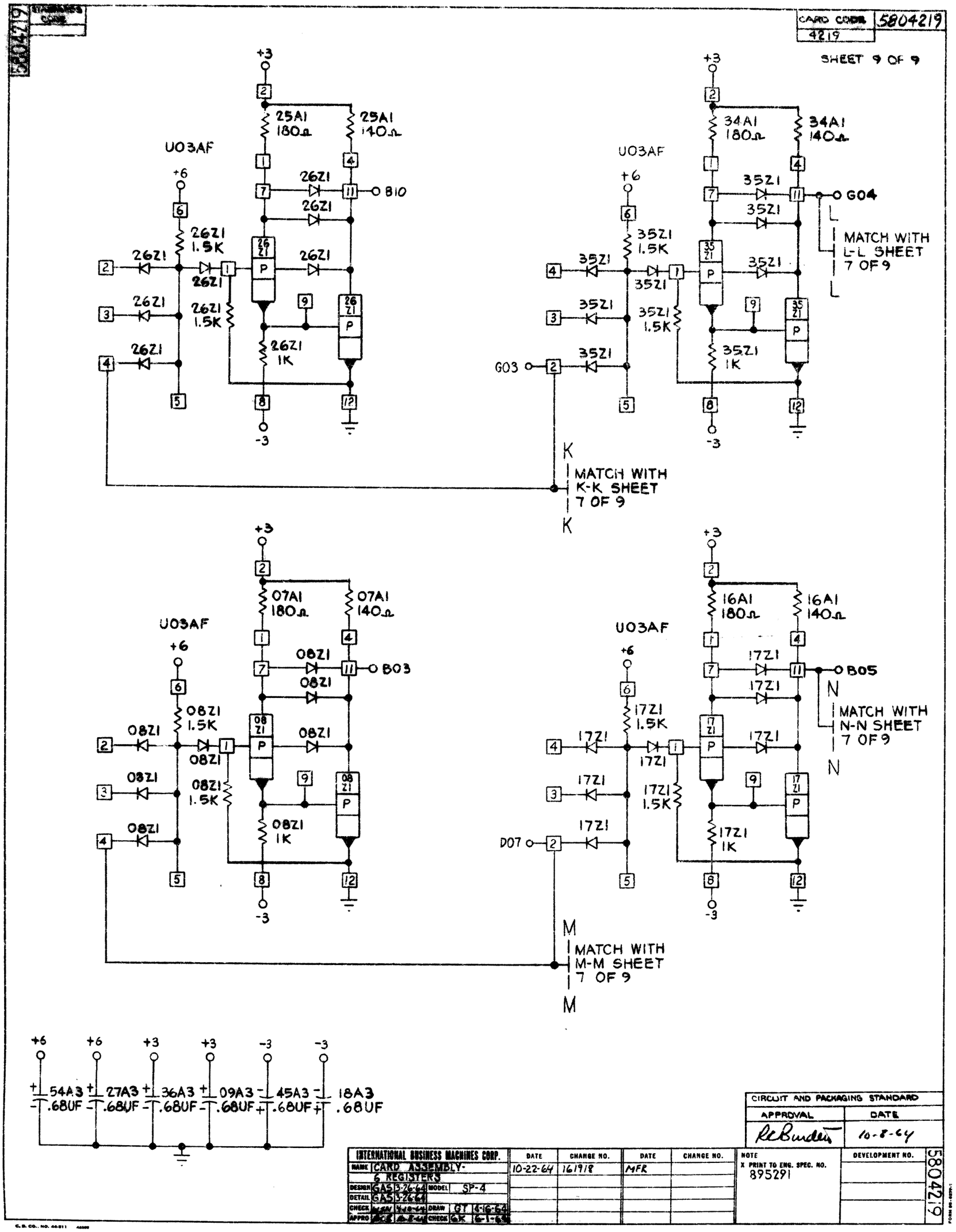

CIRCUIT AND PACKAGING STANDARD	
APPROVAL	DATE
R.C. Burden	10-8-64

INTERNATIONAL BUSINESS MACHINES CORP.							
NAME	CARD ASSEMBLY- 6 REGISTERS						
DESIGN	GAS 3-26-64	MODEL	SP-4				
DETAIL	GAS 3-26-64						
CHECK	[illegible]	DRAW	GT 4-16-64				
APPRO	[illegible]	CHECK	GK 6-1-64				

DATE	CHANGE NO.	DATE	CHANGE NO.
10-22-64	161918	MFR	

NOTE
X PRINT TO ENG. SPEC. NO.
895291

DEVELOPMENT NO.

5804219