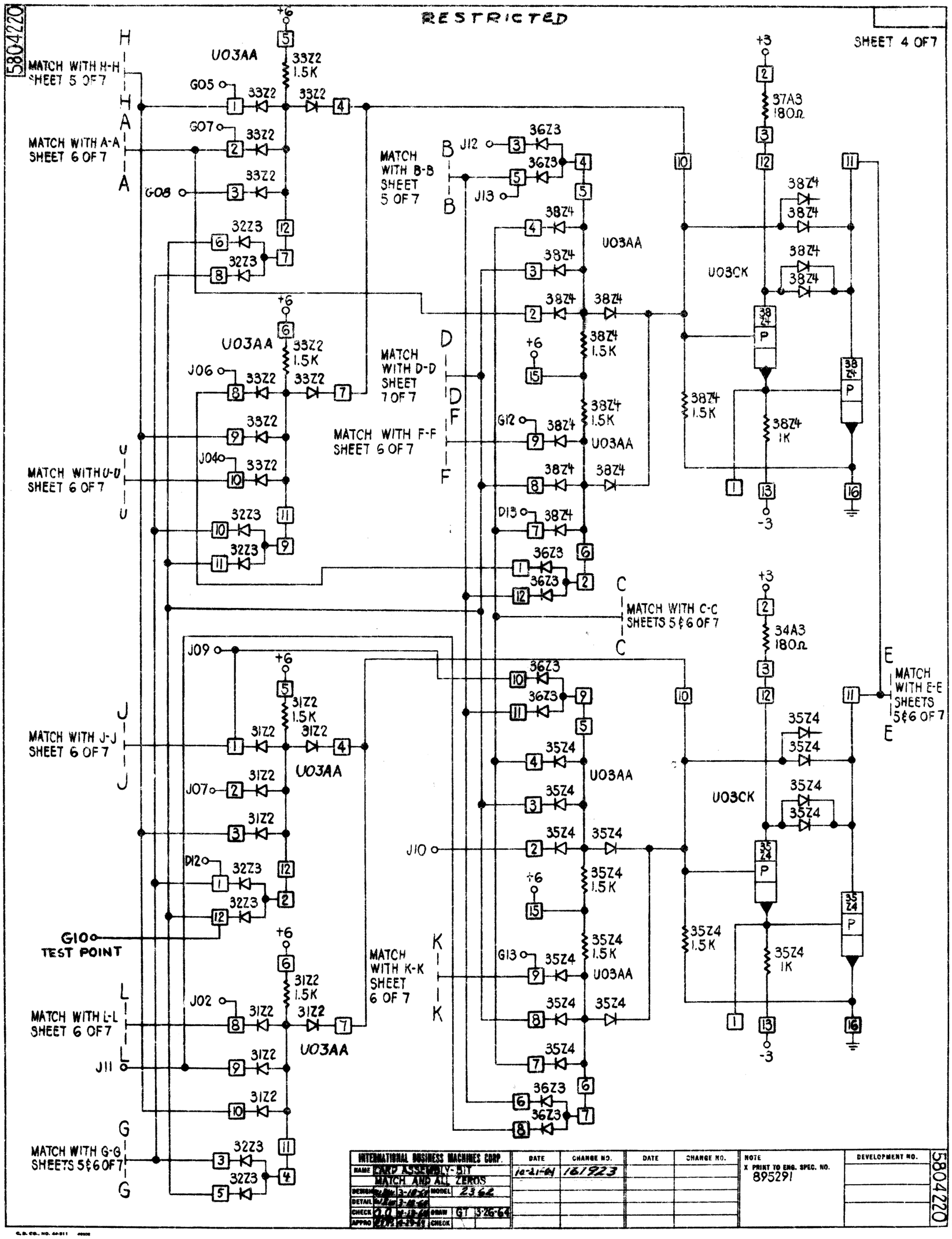
5804220
RESTRICTED
SHEET 4 OF 7
MATCH WITH H-H SHEET 5 OF 7
MATCH WITH A-A SHEET 6 OF 7
MATCH WITH B-B SHEET 5 OF 7
MATCH WITH D-D SHEET 7 OF 7
MATCH WITH F-F SHEET 6 OF 7
MATCH WITH U-U SHEET 6 OF 7
MATCH WITH C-C SHEETS 5 & 6 OF 7
MATCH WITH E-E SHEETS 5 & 6 OF 7
MATCH WITH J-J SHEET 6 OF 7
MATCH WITH K-K SHEET 6 OF 7
MATCH WITH L-L SHEET 6 OF 7
MATCH WITH G-G SHEETS 5 & 6 OF 7
G10 TEST POINT
U03AA
U03CK
+6
+3
-3
37A3 180Ω
34A3 180Ω
33Z2 1.5K
31Z2 1.5K
38Z4 1.5K
35Z4 1.5K
38Z4 1K
35Z4 1K
INTERNATIONAL BUSINESS MACHINES CORP.
NAME CARD ASSEMBLY-SIT MATCH AND ALL ZEROS
MODEL 2362
DATE 10-21-64
CHANGE NO. 161923
NOTE X PRINT TO ENG. SPEC. NO. 895291
DEVELOPMENT NO.
5804220