5804220

RESTRICTED

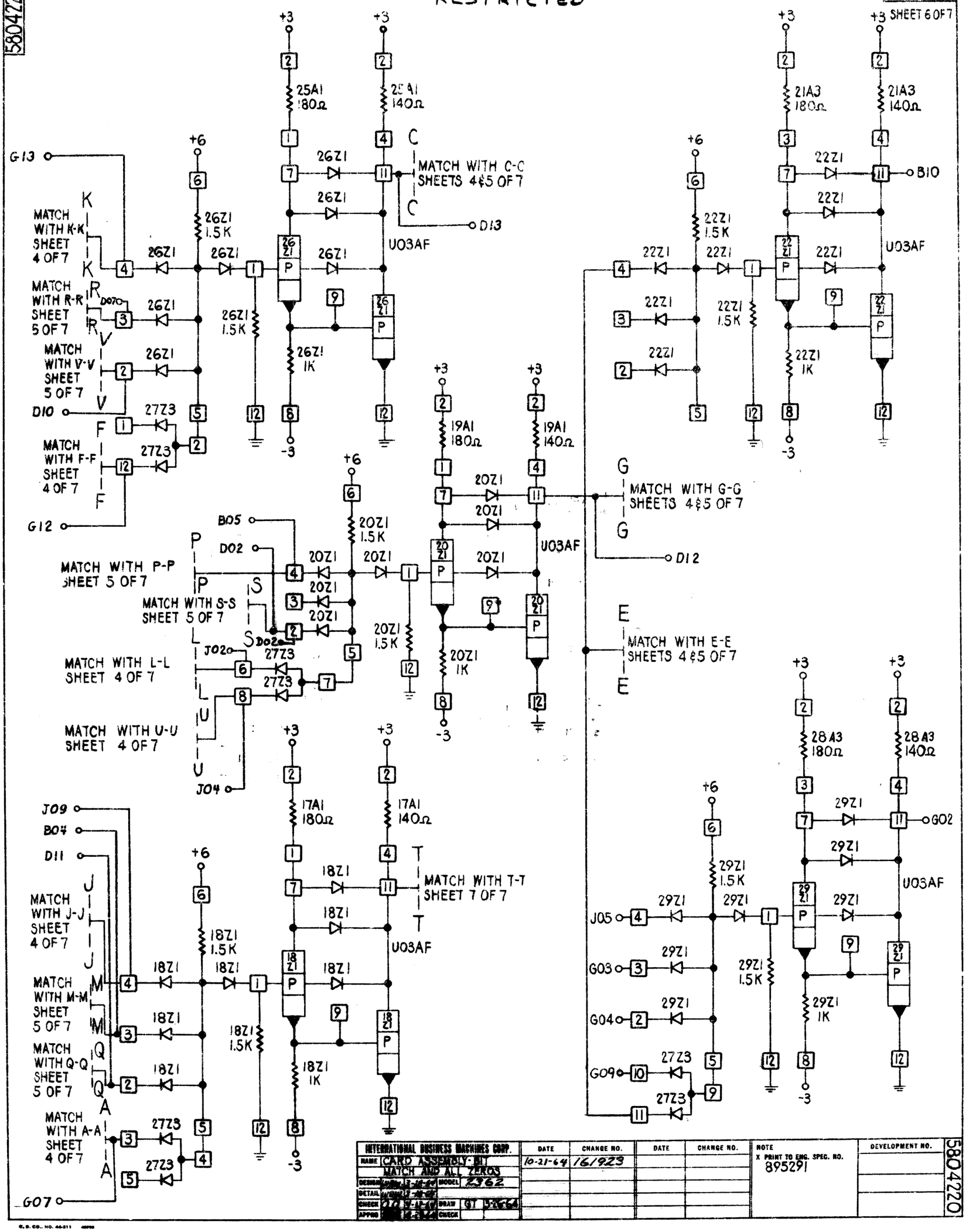

INTERNATIONAL BUSINESS MACHINES CORP.	DATE	CHANGE NO.	DATE	CHANGE NO.	NOTE	DEVELOPMENT NO.
NAME CARD ASSEMBLY-BIT MATCH AND ALL ZEROS	10-21-64	161923			X PRINT TO ENG. SPEC. NO. 895291	
DESIGN [redacted] 12-16-64 MODEL 2362						
DETAIL [redacted]						
CHECK [redacted] 12-21-64 DRAW GT 5-26-64						
APPRO [redacted] CHECK						

5804220

FORM 25-4229-1

G. B. CO., NO. 46-211