5804222

SHEET 3 OF 6

CARD CODE 4222 | 5804222

RESTRICTED

S07AT

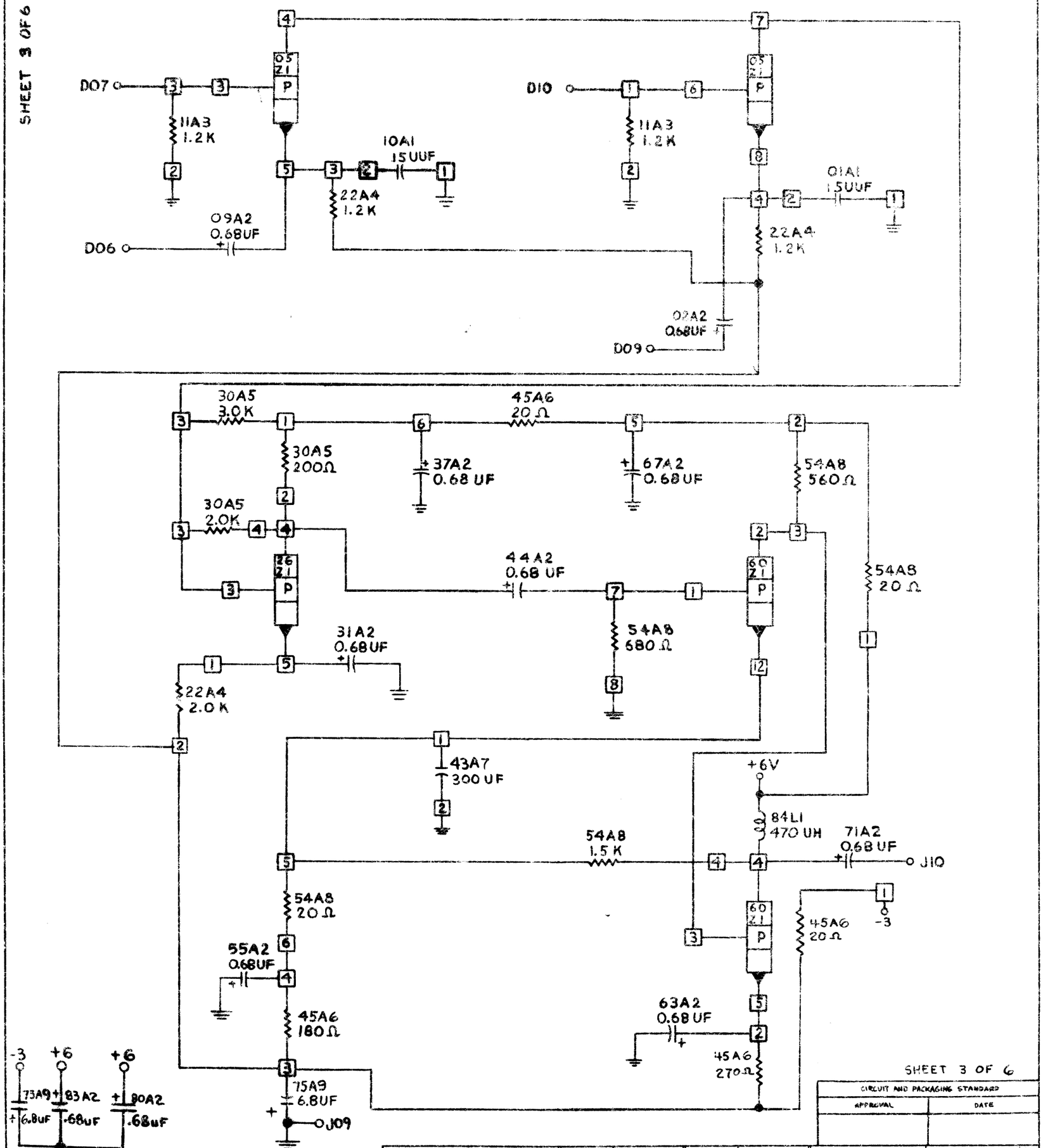

SHEET 3 OF 6

CIRCUIT AND PACKAGING STANDARD	
APPROVAL	DATE

INTERNATIONAL BUSINESS MACHINES CORP.					
NAME	CARD ASM - SENSE AMPLIFIER # 1				
DESIGN	JW 5-19-64	MODEL	5007		
DETAIL	SM 9-11-64				
CHECK	9-25-64	DRAW	G.T. 5-25-64		
APPRO	9-26-64	CHECK	5-26-64		

DATE	CHANGE NO.	DATE	CHANGE NO.
5-19-64	530-A		
10-9-64	160896		
3-2-65	169113		

NOTE
X PRINT TO ENG. SPEC. NO.
895291

DEVELOPMENT NO.
5804222

5804222