5804222 STANDARDS CODE

SHEET 6 OF 6

CARD CODE 4222 5804222

S07AT

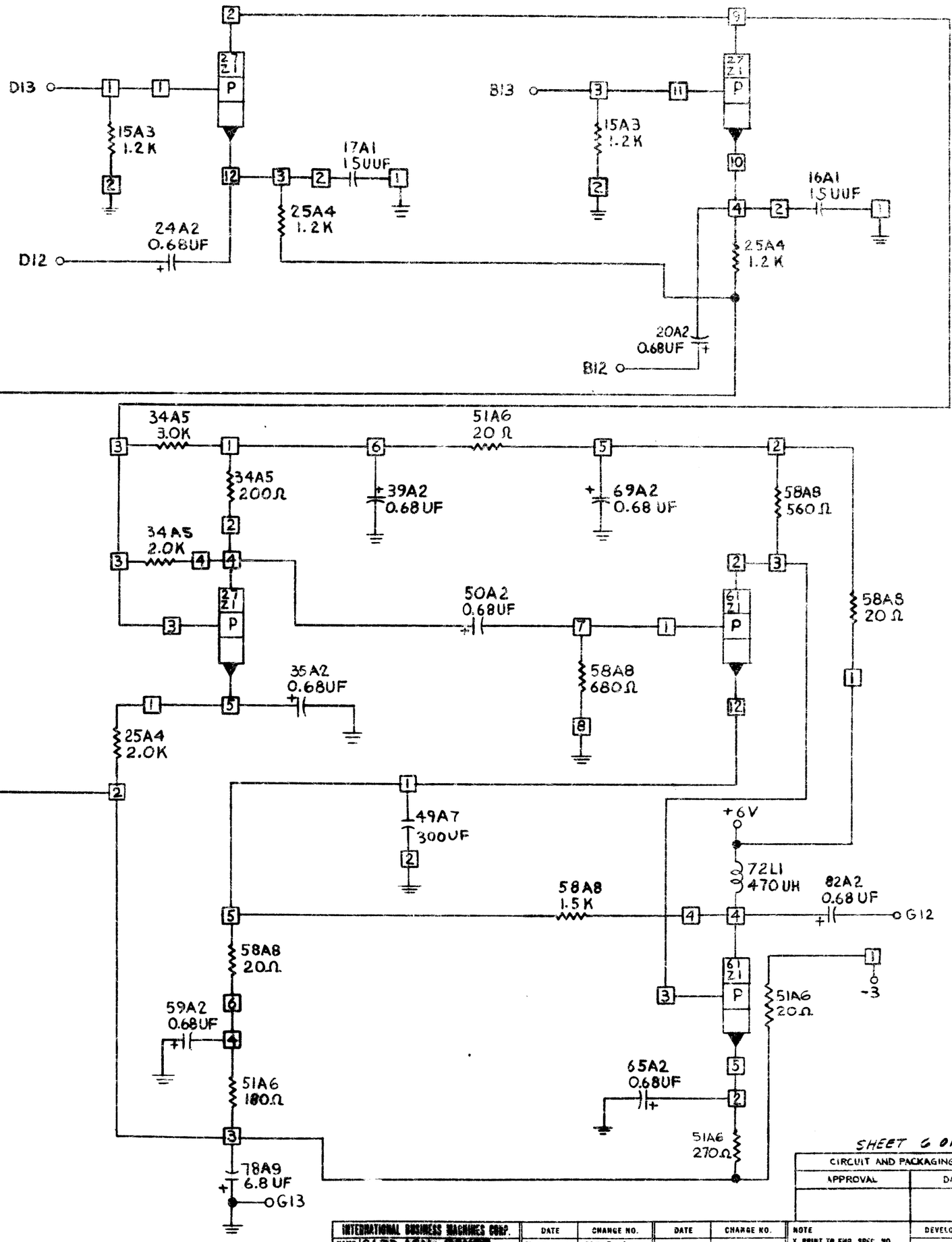

SHEET 6 OF 6

CIRCUIT AND PACKAGING STANDARDS	
APPROVAL	DATE

INTERNATIONAL BUSINESS MACHINES CORP.	DATE	CHANGE NO.	DATE	CHANGE NO.	NOTE	DEVELOPMENT NO.
NAME CARD A&N-SENSE AMPLIFIER #	5-19-64	530-A			X PRINT TO ENG. SPEC. NO. 895291	
DESIGN JW 5-19-64 MODEL 5007	10-9-64	160896				
DETAIL SM 9-11-64	3-2-65	163113				5804222
CHECK 10-15-64 DRAW G.T. 5-25-64						
APPRO CHECK 5-26-64						

5804222