5804227

STANDARD CODE 2-7045

CARD CODE 4227

5804227

SHEET 3 OF 4

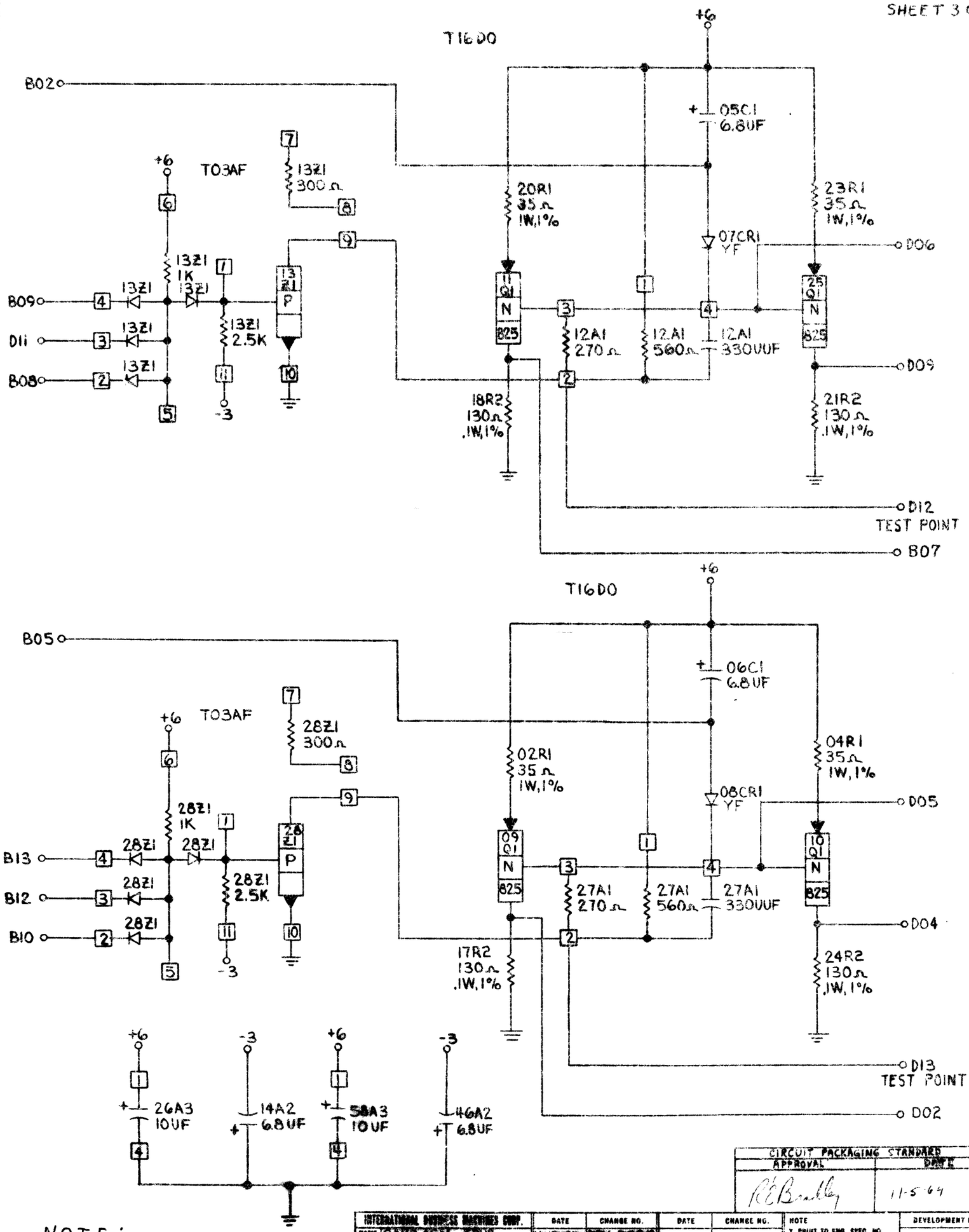

NOTE:
NO BUSSING

CIRCUIT PACKAGING STANDARD	
APPROVAL	DATE
R.E. Bradley	11-5-64

INTERNATIONAL BUSINESS MACHINES CORP.				DATE	CHANGE NO.	DATE	CHANGE NO.	NOTE	DEVELOPMENT NO.
NAME	CARD ASM. FOUR TIMING SWITCHES			11-19-64	DEV 3995			X PRINT TO ENG. SPEC. NO. 895291	
DESIGN	RHM	10-27-64	MODEL TDPS	9-7-65	DV 4224-2				
DETAIL	RHM	10-27-64							
CHECK	RES	11-2-64	DRAW						5804227
APPRO			CHECK						

5804227