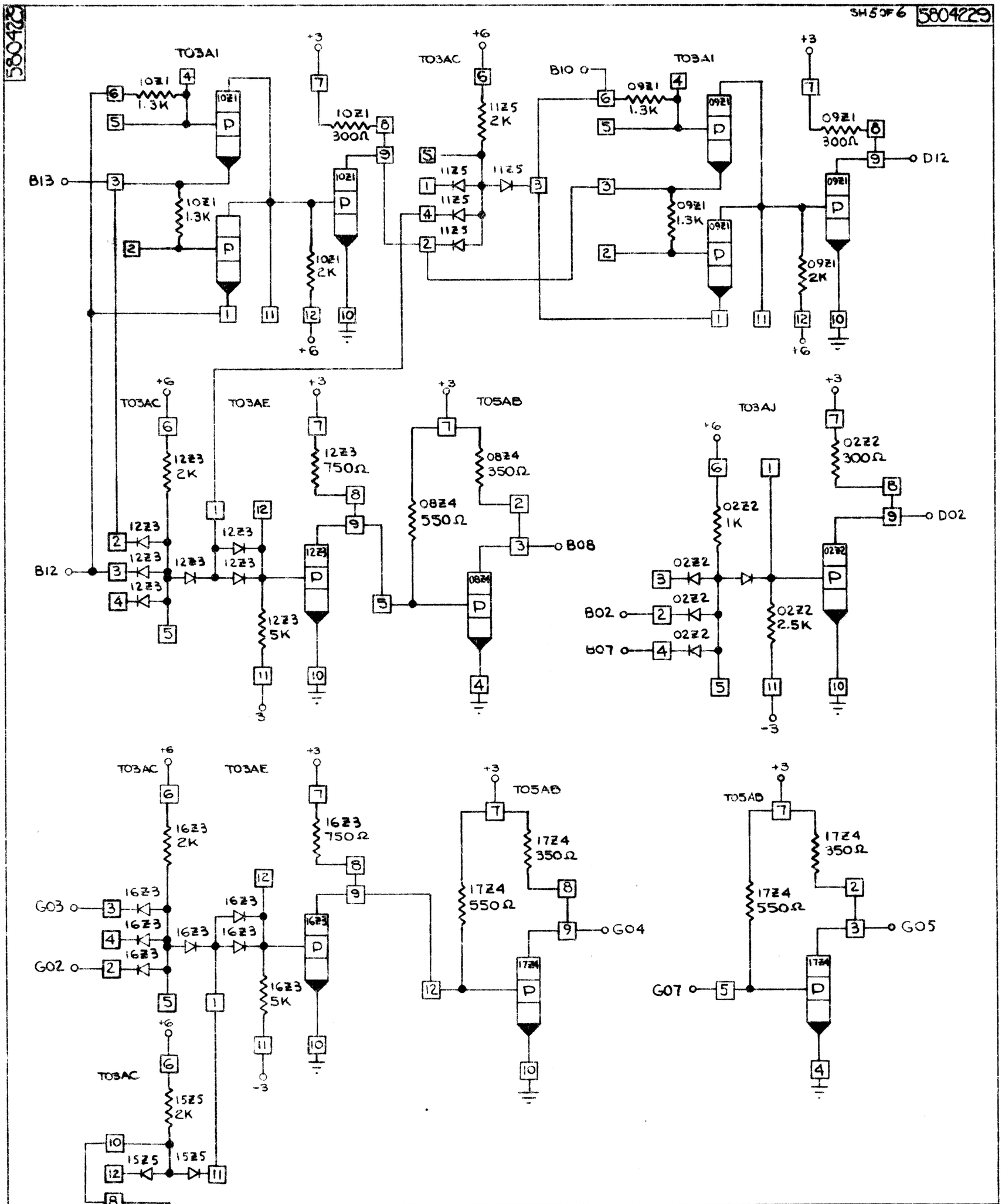

| INTERNATIONAL BUSINESS MACHINES CORP. | | |