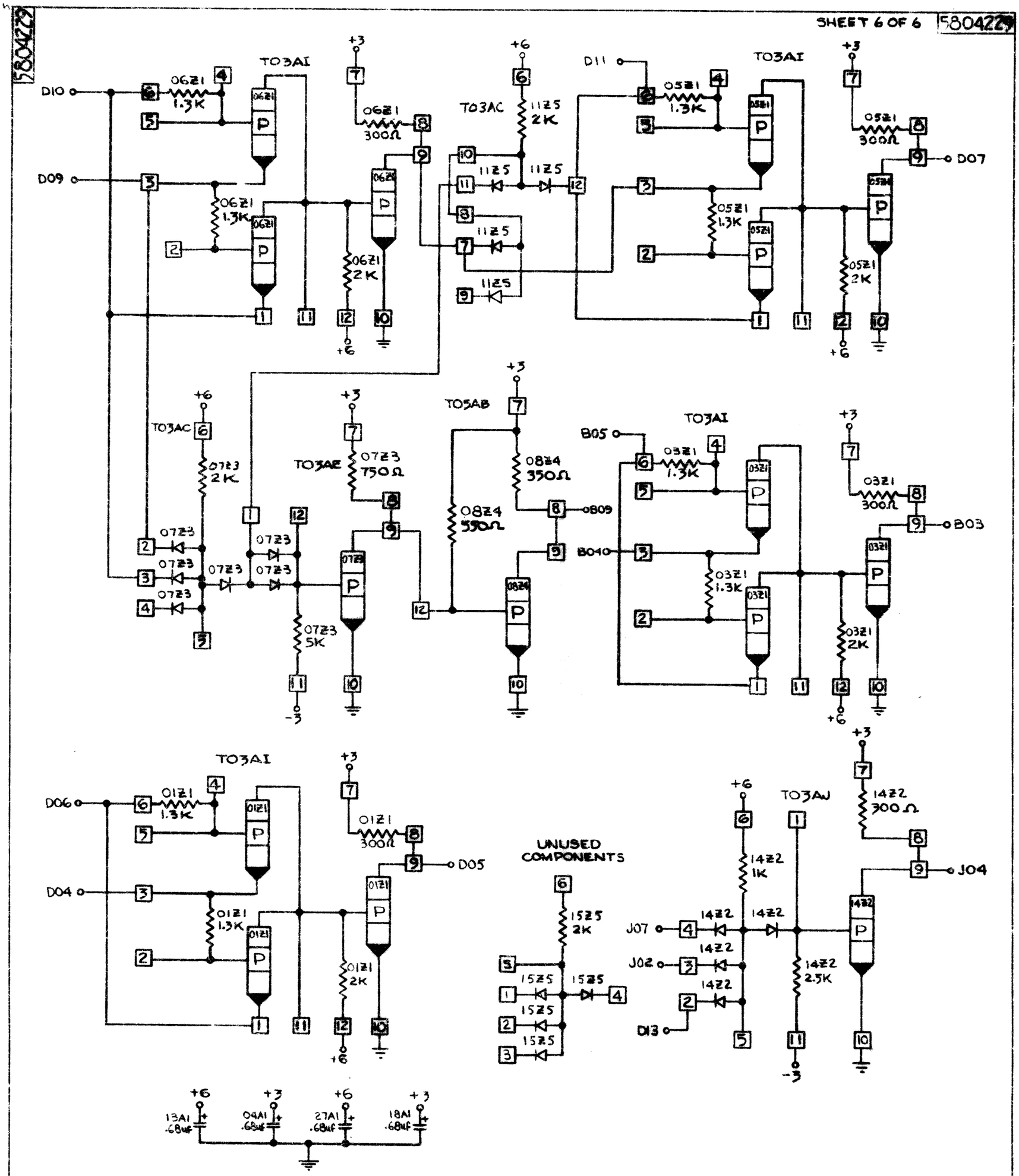

INTERNATIONAL BUSINESS MACHINES CORP.				DATE	CHANGE NO.	DATE	CHANGE NO.	NOTE	DEVELOPMENT NO.
NAME	CARD ASM - 5 ADDER STAGES			5-7-64	DEV 3364			X PRINT TO ENG. SPEC. NO.	5804229
DESIGN	NIS 5-13-64	MODEL	2250-J	11-10-64	162030				
DETAIL	NIS 5-13-64			20 OCT 65	1656658				
CHECK	MPK 6-10-64	DRAW							
APPRO	RTA 6-10-64	CHECK							

5804229