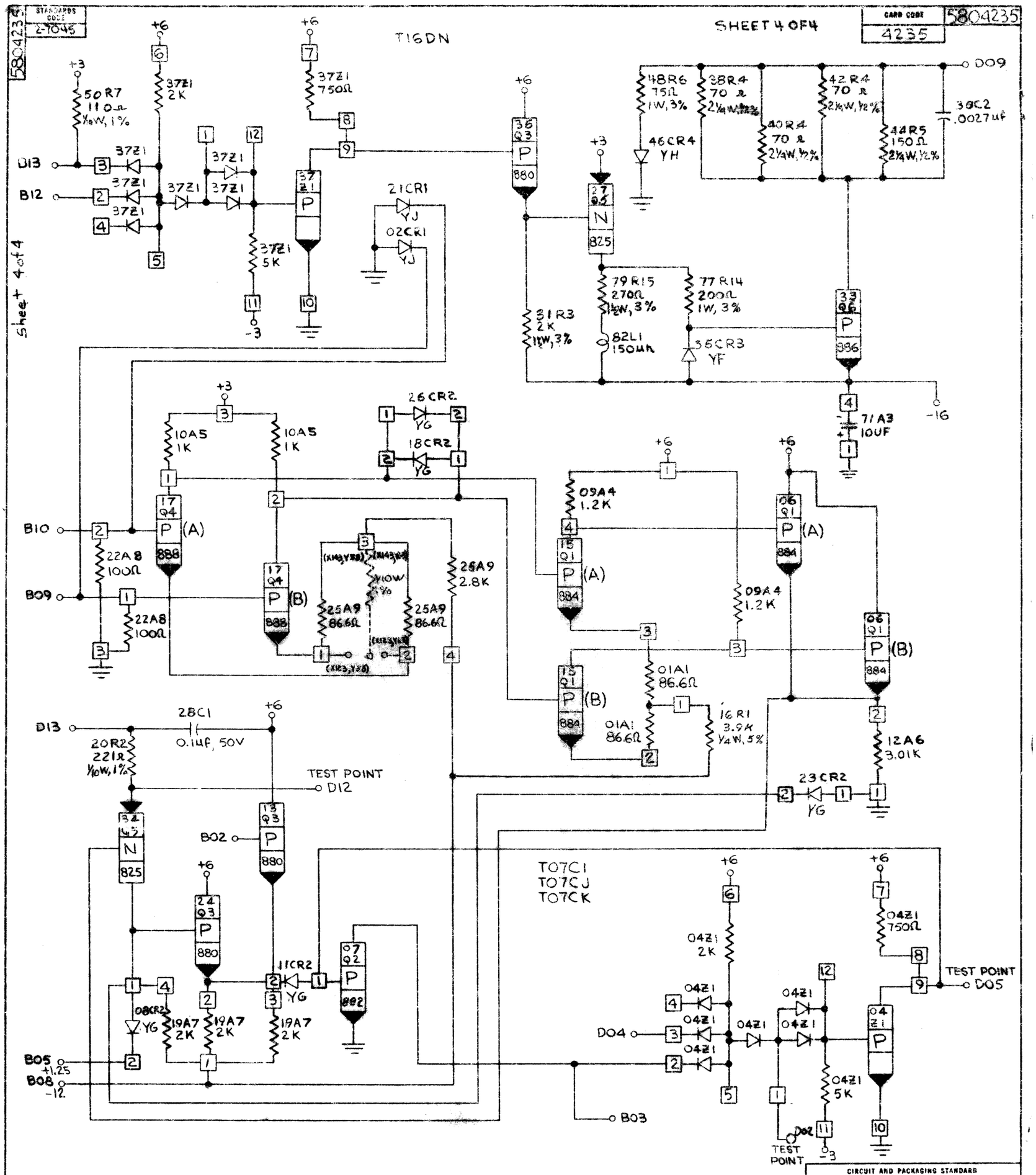
STANDARDS CODE 2-7045
5804235
CARD CODE 4235
SHEET 4 OF 4
T16DN
Sheet 4 of 4
50R7 110Ω 1/10W, 1%
37Z1 2K
37Z1 750Ω
37Z1 5K
D13
B12
21CR1 YJ
02CR1 YJ
36 Q3 P 880
27 Q5 N 825
48R6 75Ω 1W, 3%
46CR4 YH
38R4 70Ω 2¼W, ½%
40R4 70Ω 2¼W, ½%
42R4 70Ω 2¼W, ½%
44R5 150Ω 2¼W, ½%
30C2 .0027uf
D09
79R15 270Ω 1½W, 3%
77R14 200Ω 1W, 3%
81R3 2K 1½W, 3%
82L1 150uh
35CR3 YF
33 Q6 P 886
71A3 10UF
-16
10A5 1K
26CR2 YG
18CR2 YG
17 Q4 P (A) 888
17 Q4 P (B) 888
B10
B09
22A8 100Ω
25A9 86.6Ω
1/10W 1%
25A9 2.8K
09A4 1.2K
15 Q1 P (A) 884
15 Q1 P (B) 884
06 Q1 P (A) 884
06 Q1 P (B) 884
01A1 86.6Ω
16R1 3.9K 1/4W, 5%
12A6 3.01K
23CR2 YG
28C1 0.1uf, 50V
20R2 221Ω 1/10W, 1%
TEST POINT D12
34 Q5 N 825
13 Q3 P 880
B02
24 Q3 P 880
11CR2 YG
07 Q2 P 882
08CR2 YG
19A7 2K
B05 +1.25
B08 -12
T07C1
T07CJ
T07CK
04Z1 2K
04Z1 750Ω
04Z1 5K
D04
TEST POINT D05
B03
TEST POINT D02
CIRCUIT AND PACKAGING STANDARD
APPROVAL
DATE
11-23-64
INTERNATIONAL BUSINESS MACHINES CORP.
NAME CARD ASM-SA GATE DRIVER E.S.A. INHIBIT
DESIGN RZS 9-8-64 MODEL IOPS
DETAIL RZS 9-8-64 SCALE NONE
CHECK GK 11-21-64 DRAW WJS 8-2-64
APPRO. RZS 11-23-64 CHECK RZS 9-8-64
DATE
CHANGE NO.
APPROVAL
12-3-64 DEV 3496
3-1-65 DEV 4216
13APR66 DV 4223-3
DEVELOPMENT NO.
5804235
C