5804238

STANDARD G025 2-7045

CARD CODE 4238 5804238

RESTRICTED

SHEET 4 OF 5

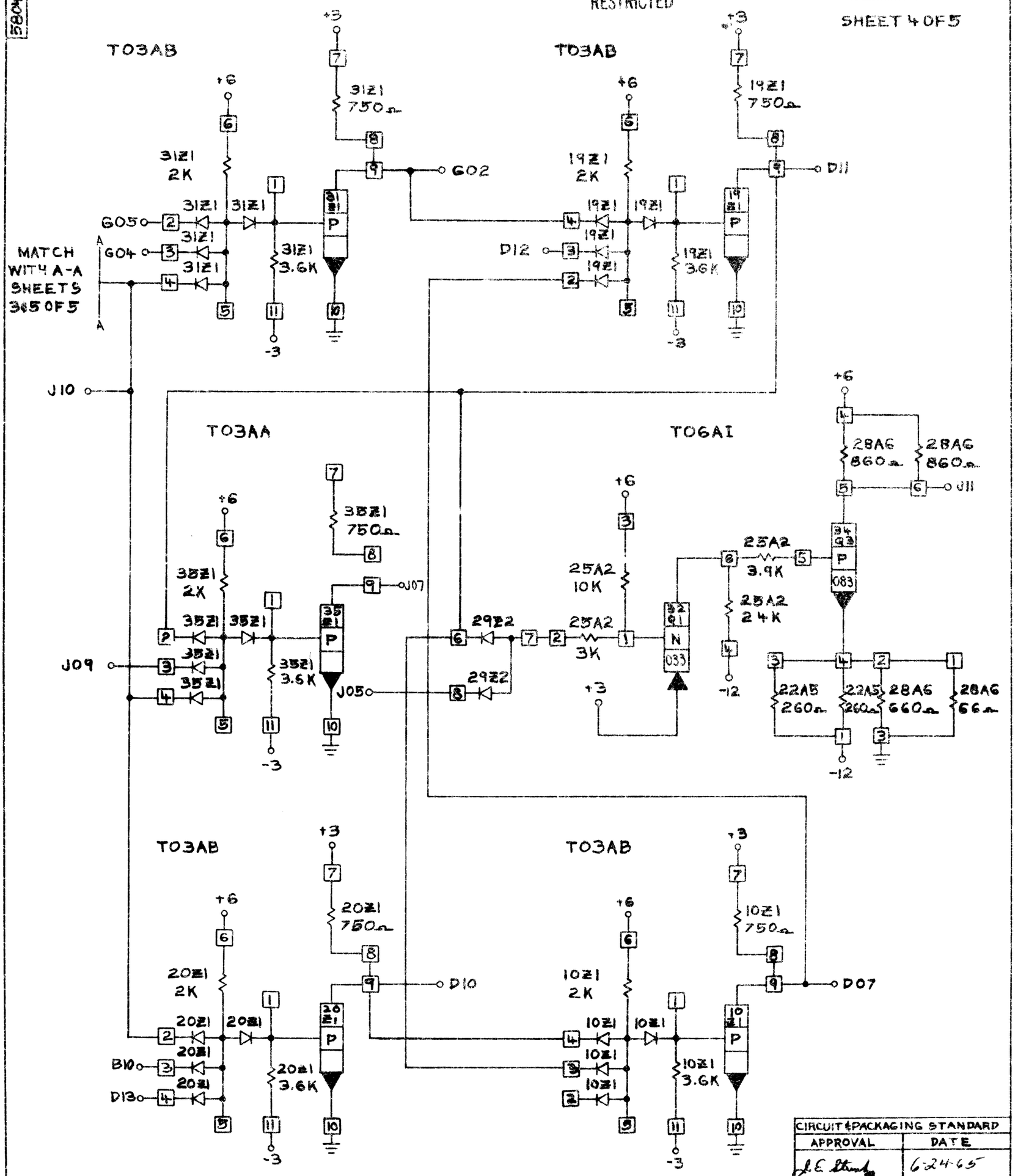

CIRCUIT & PACKAGING STANDARD	
APPROVAL	DATE
J.E. Stroud	6-24-65

INTERNATIONAL BUSINESS MACHINES CORP.			
NAME	CARD ASM-DIAL ADAPTER		
DESIGN	N15 [redacted]	MODEL	2702
DETAIL	N15 [redacted]		
CHECK	[redacted]	DRAW	N15 5-21-65
APPRO	J.E. [redacted]	CHECK	

DATE	CHANGE NO.	DATE	CHANGE NO.
11-19-64	161919		
5-4-65	163494		
7-9-65	164254 C		

NOTE
X PRINT TO ENG. SPEC. NO.

DEVELOPMENT NO.

5804238

C.B. CO., NC 65-811A 42849

FORM 23-8278-1