5804264

STANDARDS CODE 2-7045

CARD CODE 5804264

SHEET 7 OF 10

RESTRICTED

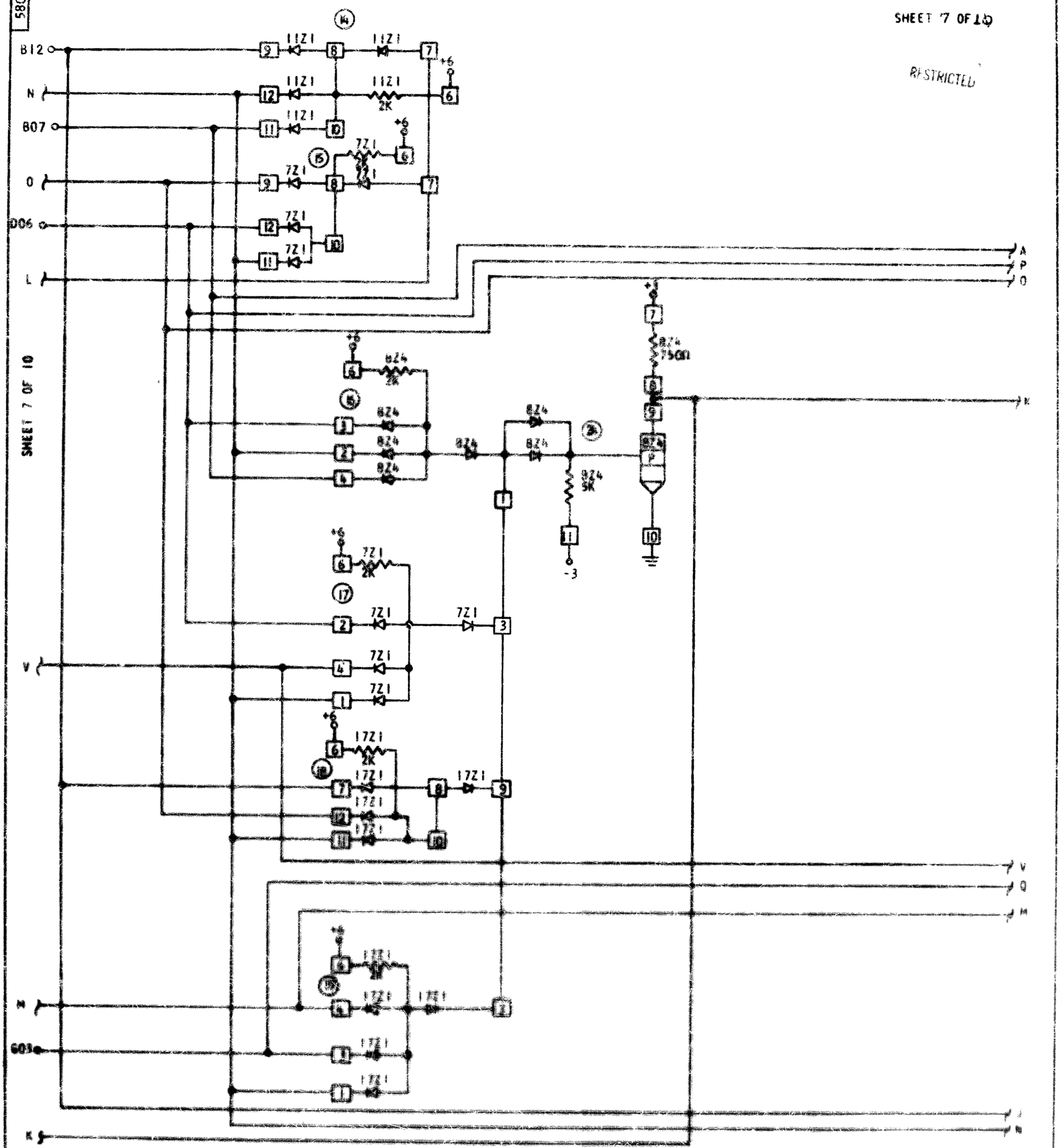

SHEET 7 OF 10

C