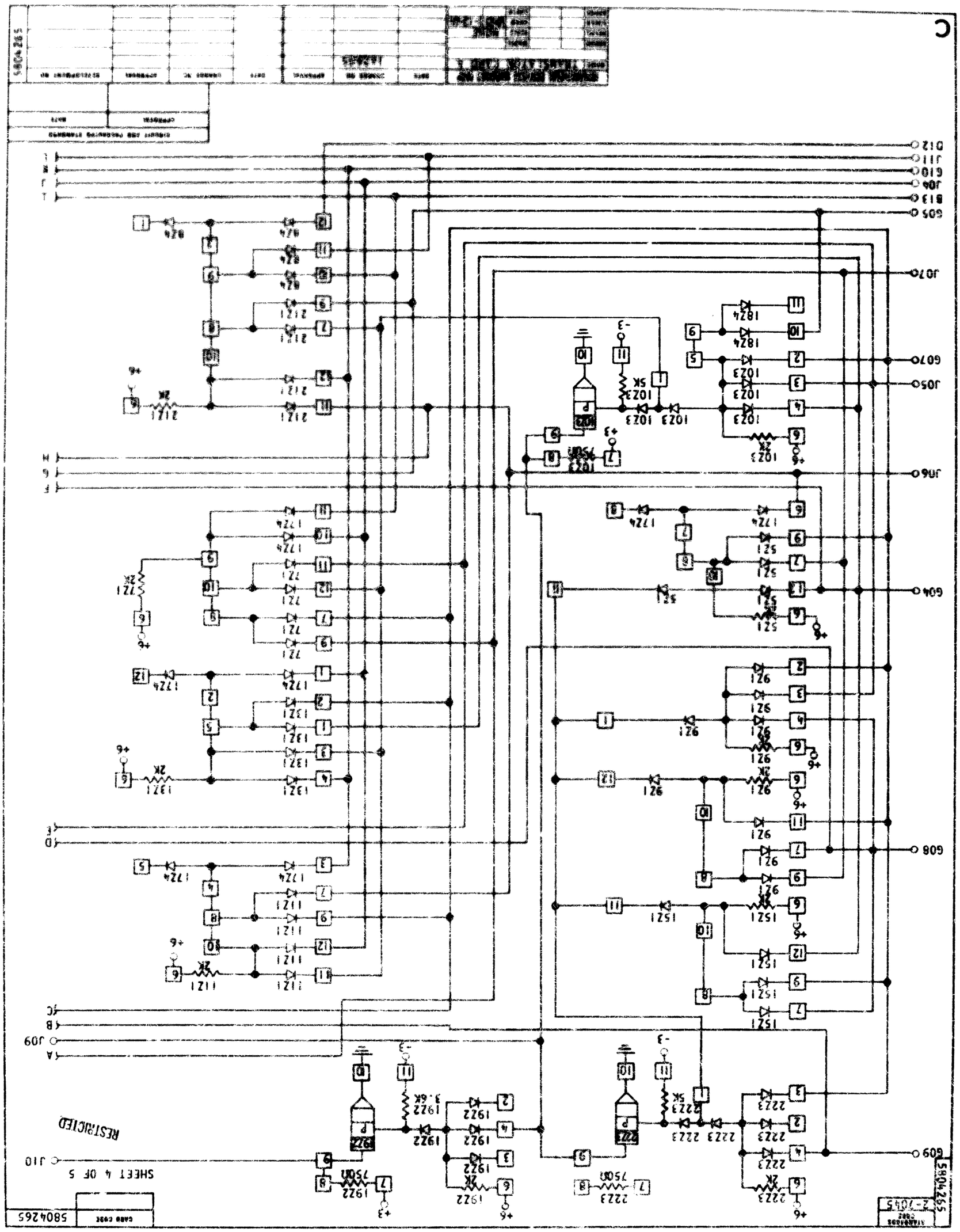
RESTRICTED
SHEET 4 OF 5
J10
J09
J08
J07
J06
J05
J04
J03
J02
J01
5804265