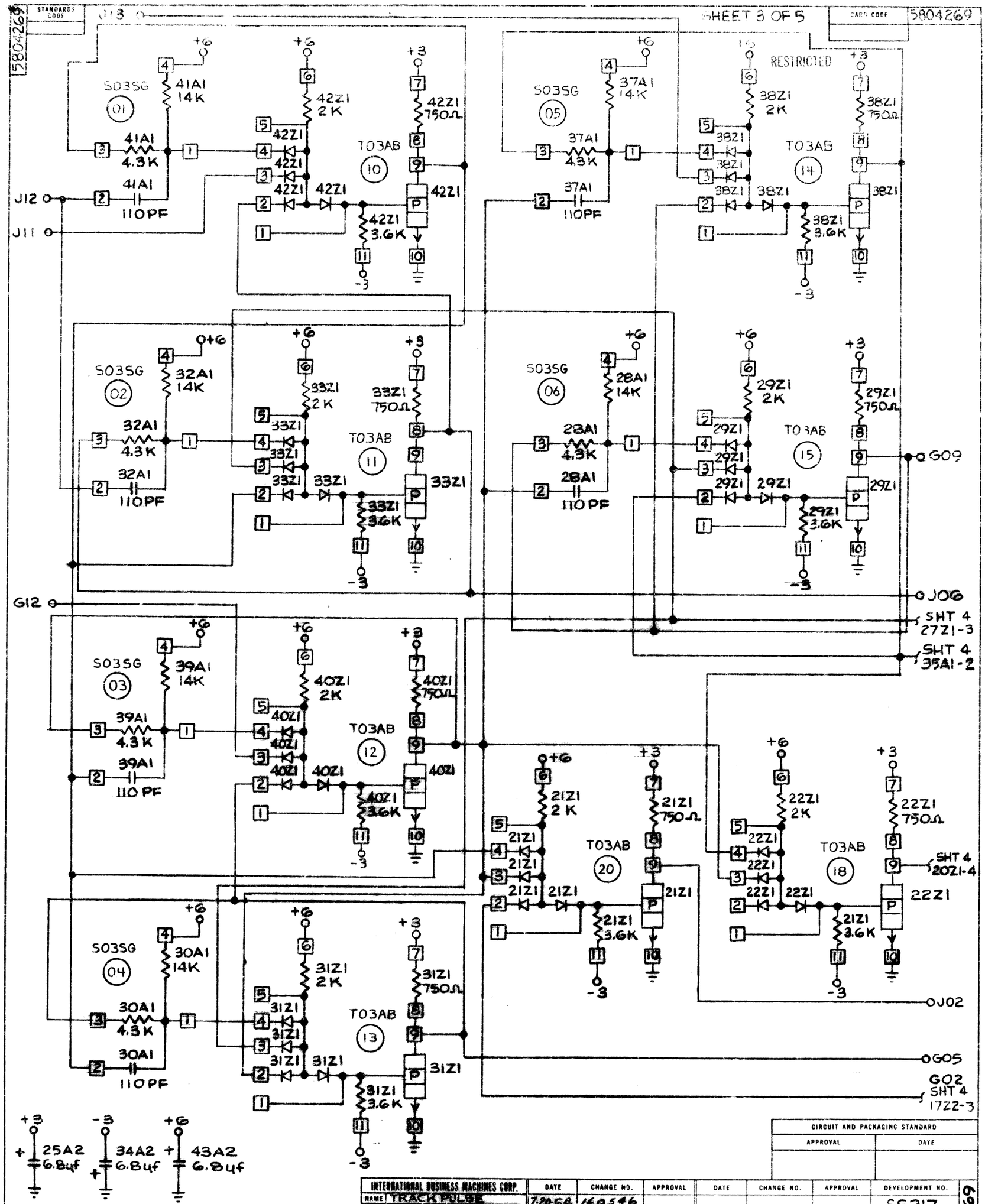
5804269
SHEET 3 OF 5
RESTRICTED
S03SG (01)
S03SG (02)
S03SG (03)
S03SG (04)
S03SG (05)
S03SG (06)
T03AB (10)
T03AB (11)
T03AB (12)
T03AB (13)
T03AB (14)
T03AB (15)
T03AB (18)
T03AB (20)
41A1 14K
41A1 4.3K
41A1 110PF
42Z1 2K
42Z1 750Ω
42Z1 3.6K
32A1 14K
32A1 4.3K
32A1 110PF
33Z1 2K
33Z1 750Ω
33Z1 3.6K
39A1 14K
39A1 4.3K
39A1 110 PF
40Z1 2K
40Z1 750Ω
40Z1 3.6K
30A1 14K
30A1 4.3K
30A1 110PF
31Z1 2K
31Z1 750Ω
31Z1 3.6K
37A1 14K
37A1 4.3K
37A1 110PF
38Z1 2K
38Z1 750Ω
38Z1 3.6K
28A1 14K
28A1 4.3K
28A1 110 PF
29Z1 2K
29Z1 750Ω
29Z1 3.6K
21Z1 2 K
21Z1 750Ω
21Z1 3.6K
22Z1 2K
22Z1 750Ω
22Z1 3.6K
J12
J11
G12
G09
J06
SHT 4 27Z1-3
SHT 4 35A1-2
SHT 4 20Z1-4
J02
G05
G02 SHT 4 17Z2-3
25A2 6.8μf
34A2 6.8μf
43A2 6.8μf
CIRCUIT AND PACKAGING STANDARD
APPROVAL
DATE
INTERNATIONAL BUSINESS MACHINES CORP.
NAME TRACK PULSE COUNTER WITH DECODES
DESIGN
DETAIL
CHECK
APPRO
MODEL 2311
SCALE NONE
DRAWN MRL 7-13-64
CHECK JEB 7-18-64
DATE
CHANGE NO.
APPROVAL
DEVELOPMENT NO.
7-20-64 160546
1-14-65 162766
14AUG68 173116 C
SS217
5804269
C