5804269

STANDARDS CODE

SHEET 5 OF 5

CARD CODE 5804269

RESTRICTED

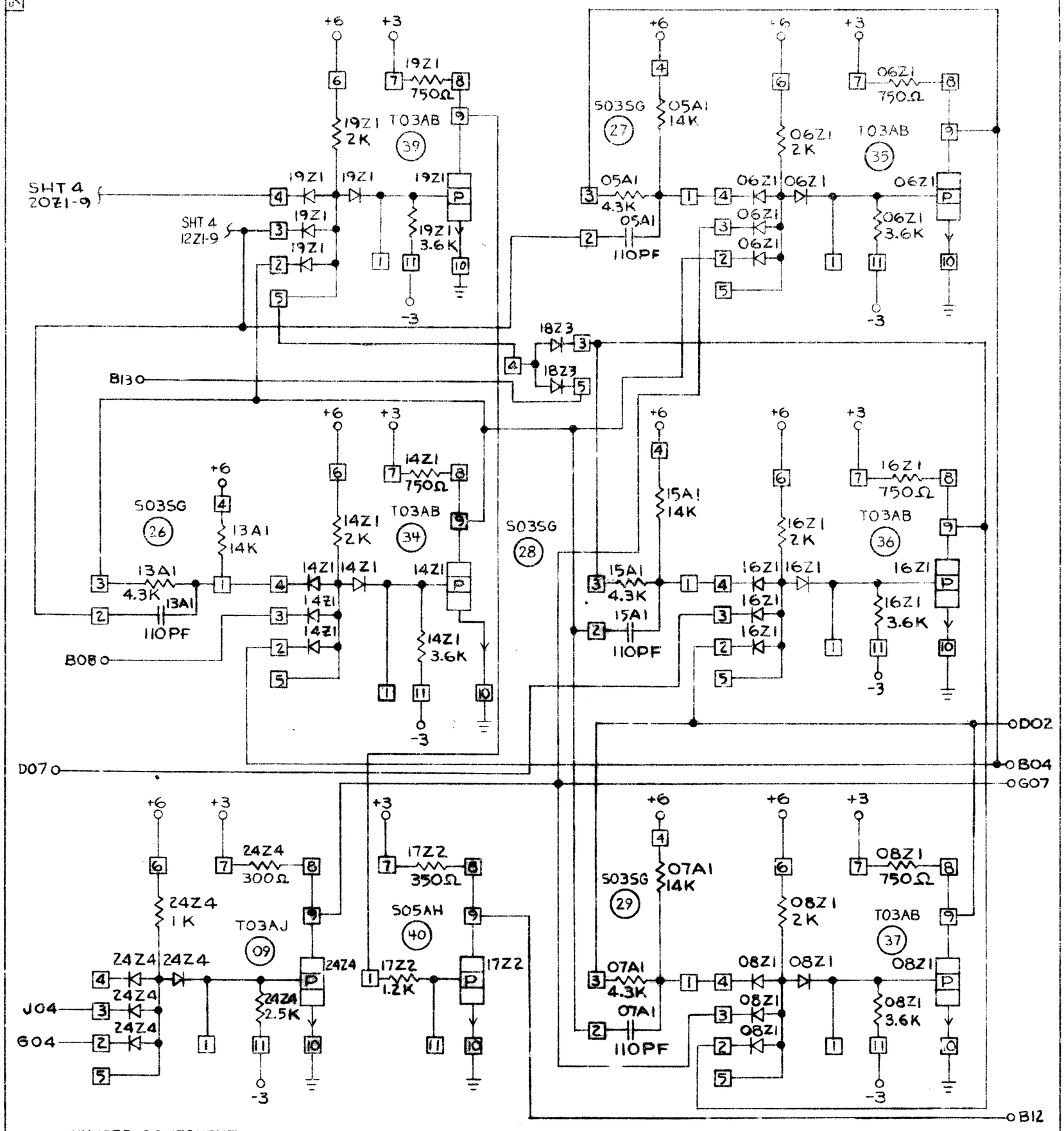

UNUSED COMPONENT

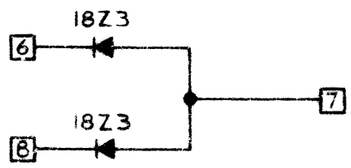

CIRCUIT AND PACKAGING STANDARD	
APPROVAL	DATE

INTERNATIONAL BUSINESS MACHINES CORP.	DATE	CHANGE NO.	APPROVAL	DATE	CHANGE NO.	APPROVAL	DEVELOPMENT NO.
NAME TRACK PULSE COUNTER WITH DECODES	7-20-64	160546					SS217
DESIGN T.A. MODEL 2312	1-14-65	162766					
DETAIL SCALE NONE	14AUG68	173116	C				
CHECK DRAW MRL 7-14-64							5804269
APPRO CHECK JBS 7-15-4							

5804269

C

C. B. CO., NO. 8746W