SHEET 4 OF 4

CARD CODE 5804271

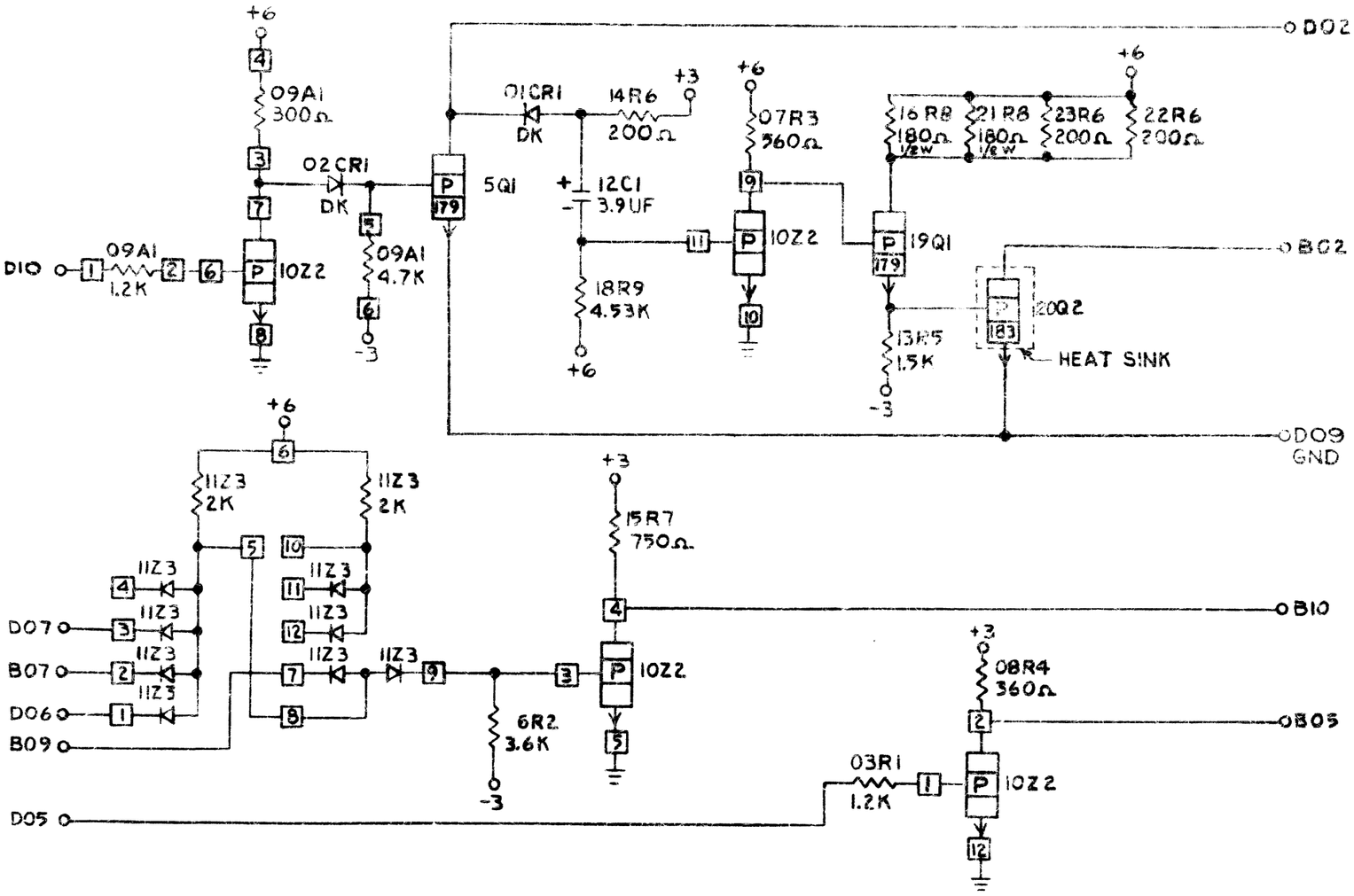

INTERNATIONAL BUSINESS MACHINES CORP.															
NAME	SOLENOID DRIVER & LOGIC				DATE	CHANGE NO.	APPROVAL	DATE	CHANGE NO.		APPROVAL	DEVELOPMENT NO.	5804271
DESIGN	H.S.	7/10/64	MODEL	2311	7-21-64	160548		5 DEC66	169545	F		SS 200	
DETAIL	MEL	7/12/64	SCALE	NONE	12-16-64	162086							
CHECK	T.H.	7/10/64	DRAW	MEL 7-12-64	1-26-65	162403							
APPRO	[illegible]	[illegible]	CHECK	JEB 7-13-64	23JUL65	164823	D					5804271	
					25JAN66	167413	E						

CIRCUIT AND PACKAGING STANDARD	
APPROVAL	DATE

C