5804280

STANDARD COPY

RESTRICTED

CHANGE CODE | 5804280

SHEET 6 OF 7

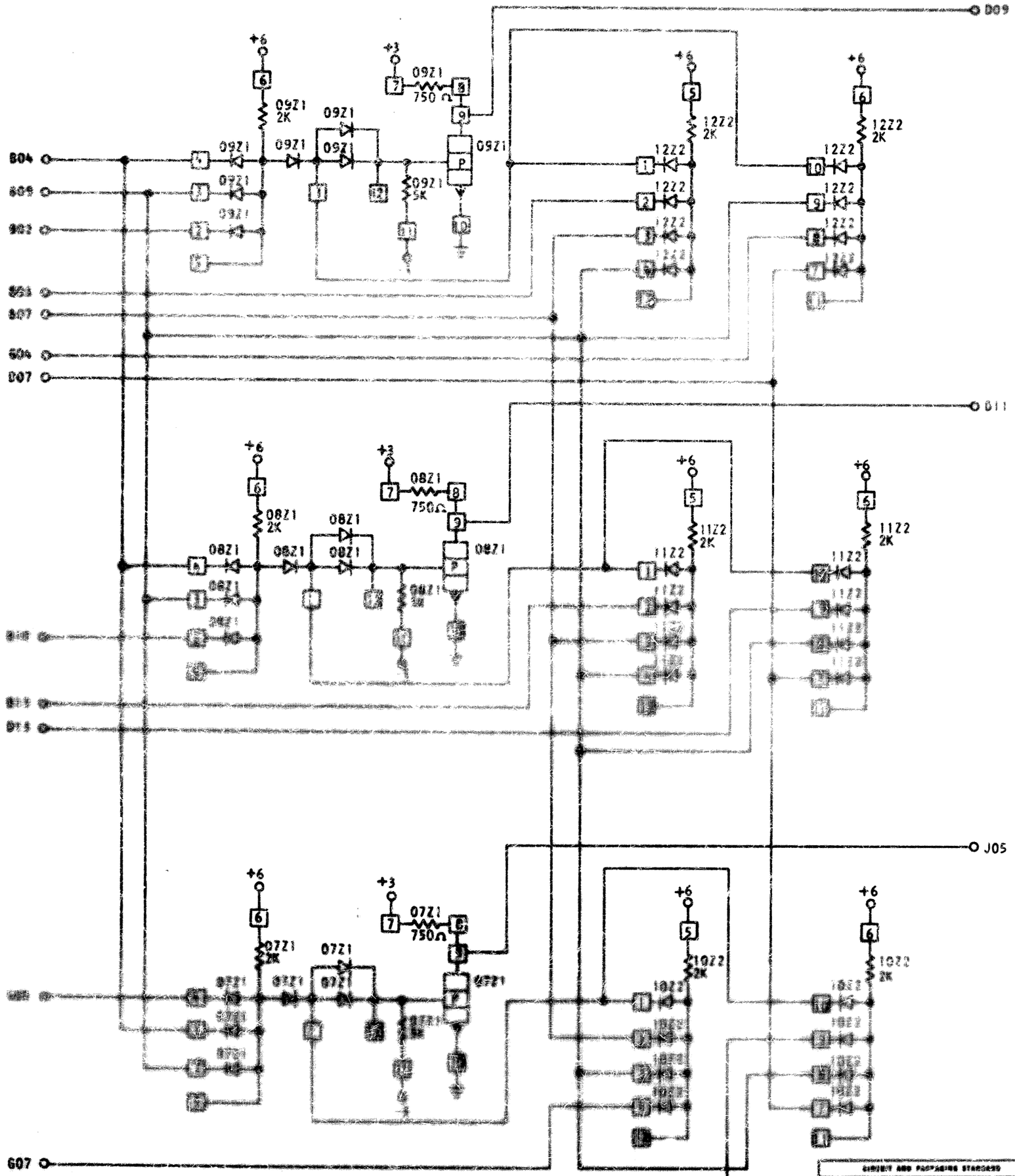

CIRCUIT AND PACKAGING STANDARDS	
APPROVAL	DATE

INTERNATIONAL BUSINESS MACHINES CORP.	DATE	CHANGE NO.	APPROVAL	DATE	CHANGE NO.	APPROVAL	DEVELOPMENT NO.	
NAME 2 WAY LOAD 0 ASSEMBLER W/LOW GATE		161066					SS342	5804280
DRAWN BY 2841								
DETAILS							5804280	
CHECK								
APPROVAL								

C