5804282

STANDARDS CODE 2-6236

SHEET 5 OF 7

CARD CODE 5804282

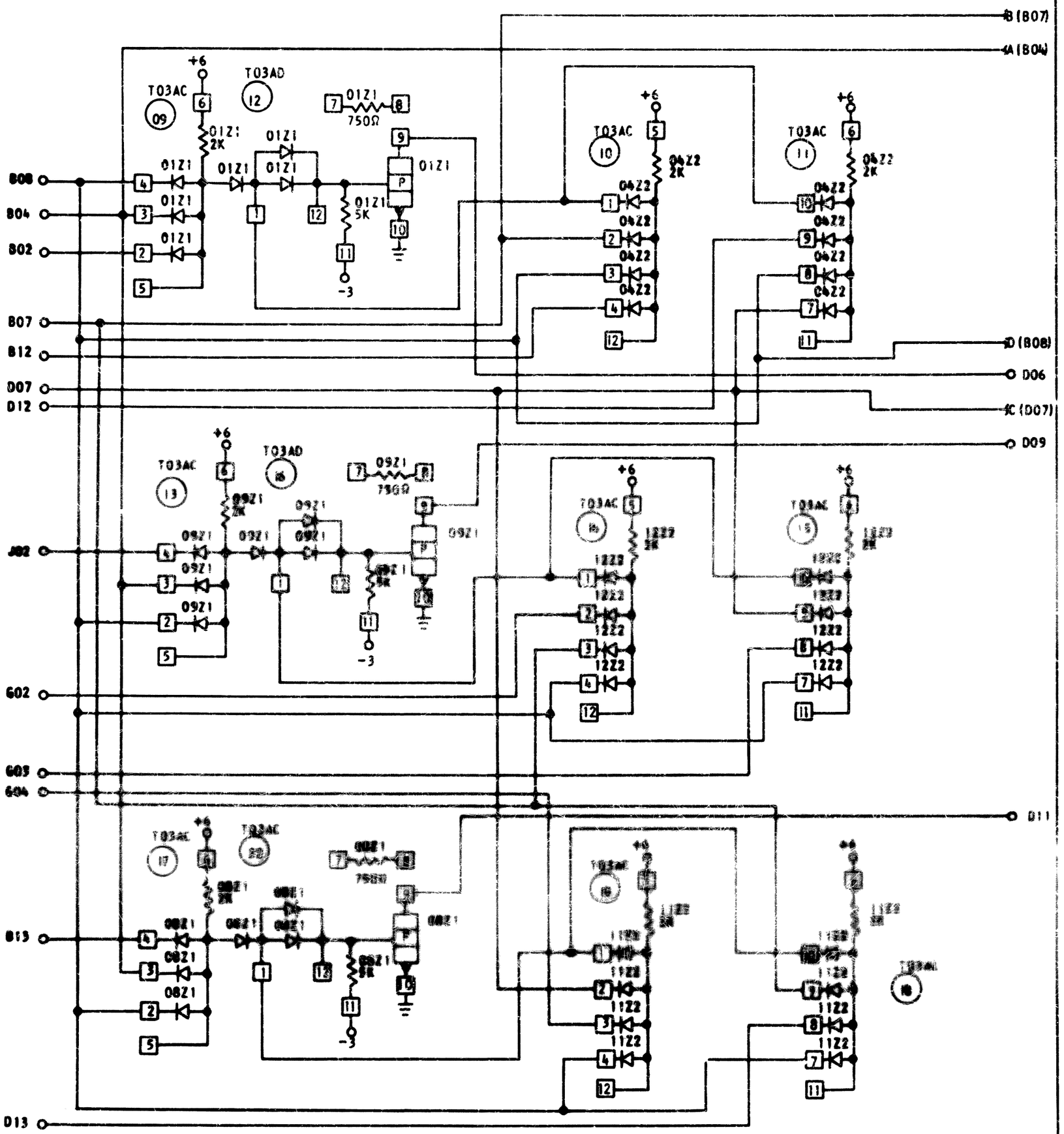

NOTE: NO BUSSING CONDITION

CIRCUIT AND PACKAGING STANDARD	
APPROVAL	DATE

	DATE	CHANGE NO.	APPROVAL	DATE	CHANGE NO.	APPROVAL	DETAIL DRAWING NO.
							55344
							[illegible]

C