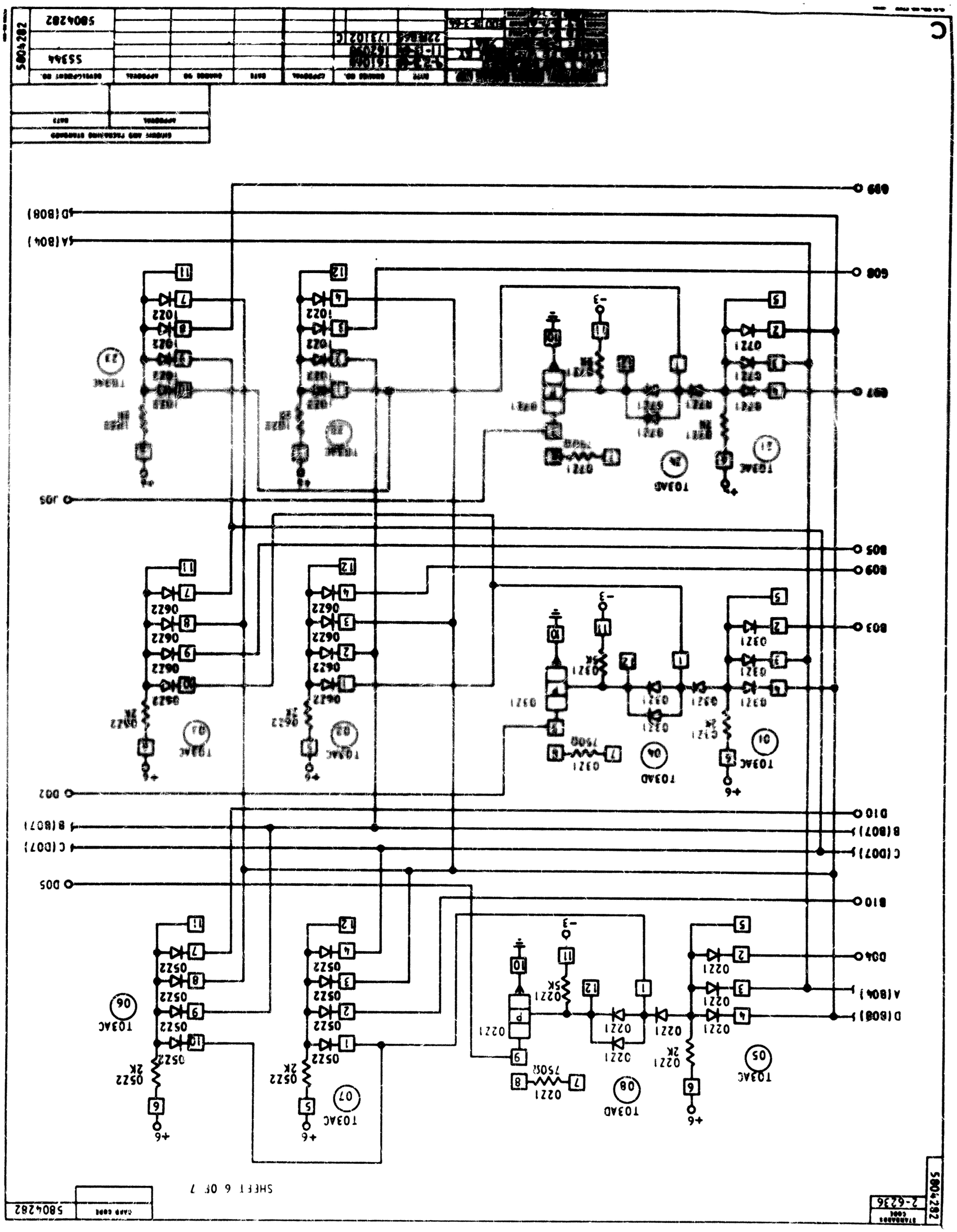
SHEET 6 OF 7
5804282
2-6236
STANDARDS CODE
CAMP CODE
5804282
55344
DRAWING NO.
DATE
APPROVAL
DRAWING NO.
DATE
APPROVAL
DRAWING NO.
DATE
APPROVAL
DRAWING AND PACKAGING STANDARDS
DATE
APPROVAL
DRAWN
CHECKED
APPROVED
DRAWING NO.
DATE
APPROVAL
DRAWING NO.
DATE
APPROVAL
DRAWING NO.
DATE
APPROVAL