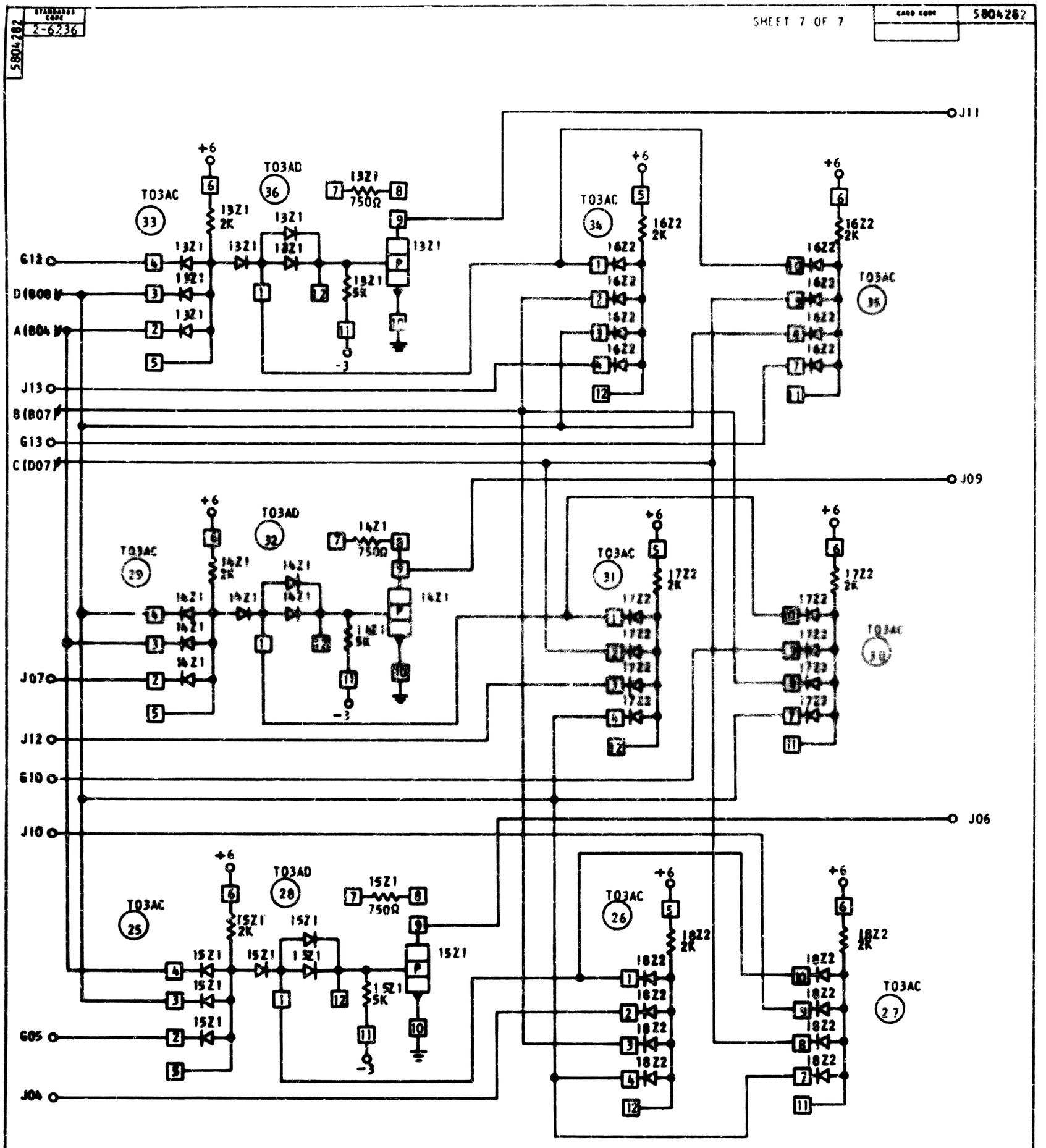

CIRCUIT AND PACKAGING STANDARD	
APPROVAL	DATE

INTERNATIONAL BUSINESS MACHINES CORP.	DATE	CHANGE NO.	APPROVAL	DATE	CHANGE NO.	APPROVAL	DEVELOPMENT NO.	
DRAWN R. TAY	11-23-64	161068					SS344	5804282
ASSEMBLER W/COMMON GATE	11-13-64	162098						
2841	22-[illegible]	173102C						
	5-4-64						5804282	