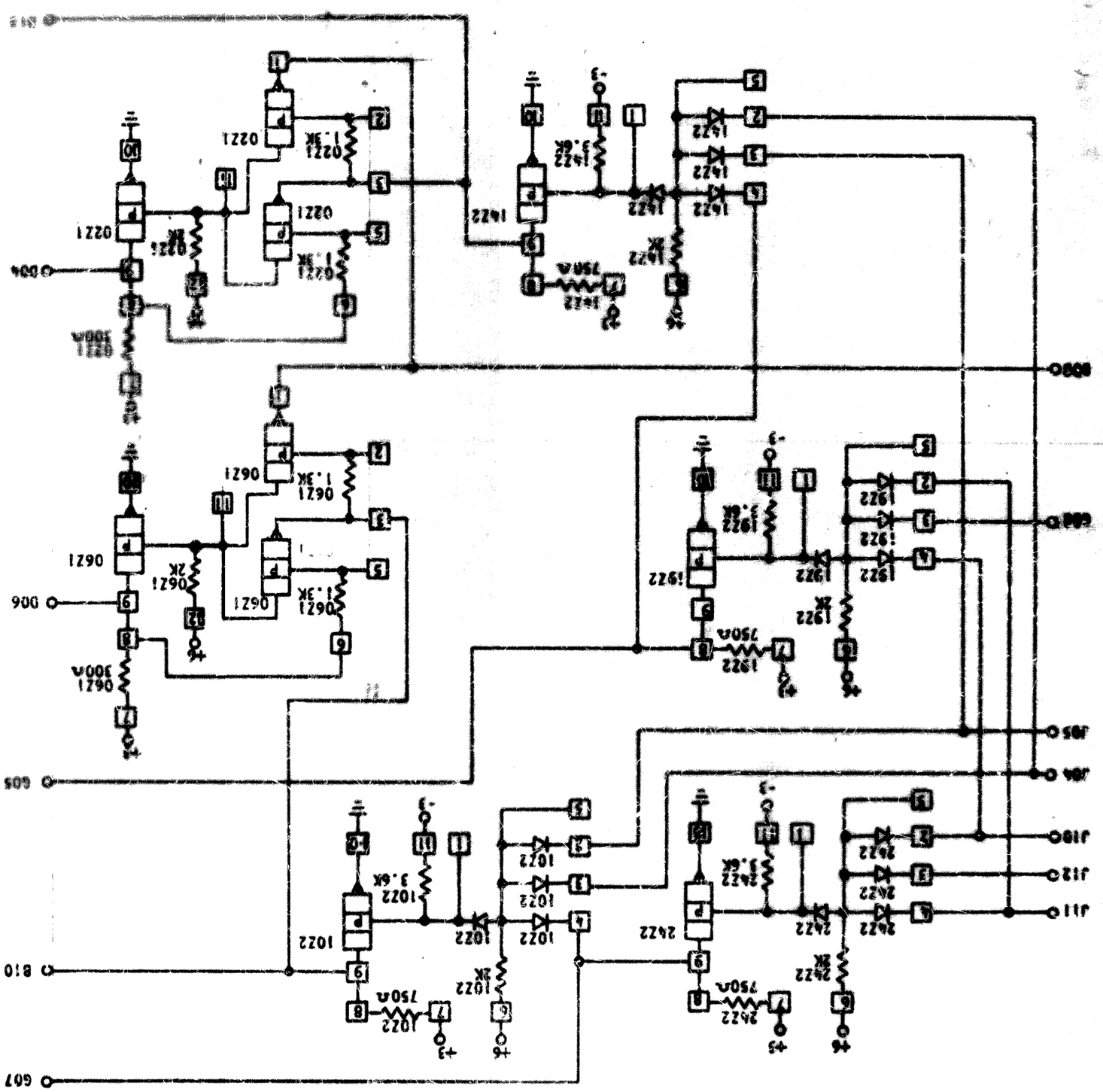
CIRCUIT AND PACKAGING STANDARD
APPROVAL
DATE
REVISION
APPROVAL
DATE
CHANGE NO.
APPROVAL
DATE
REVISION NO.
APPROVAL
DATE
5804203
SHEET 4 OF 6
RESTRICTED
5804203
J11
J12
J10
J9
J8
J7
G07
B10
G05
G06
G04
G03
G02
G01
0621
1.3K
2K
300Ω
0221
1.3K
2K
300Ω
1022
3.6K
2K
750Ω
1922
3.6K
2K
750Ω
2422
3.6K
2K
750Ω
1422
3.6K
2K
750Ω