5804283

SHEET 5 OF 6

RESTRICTED

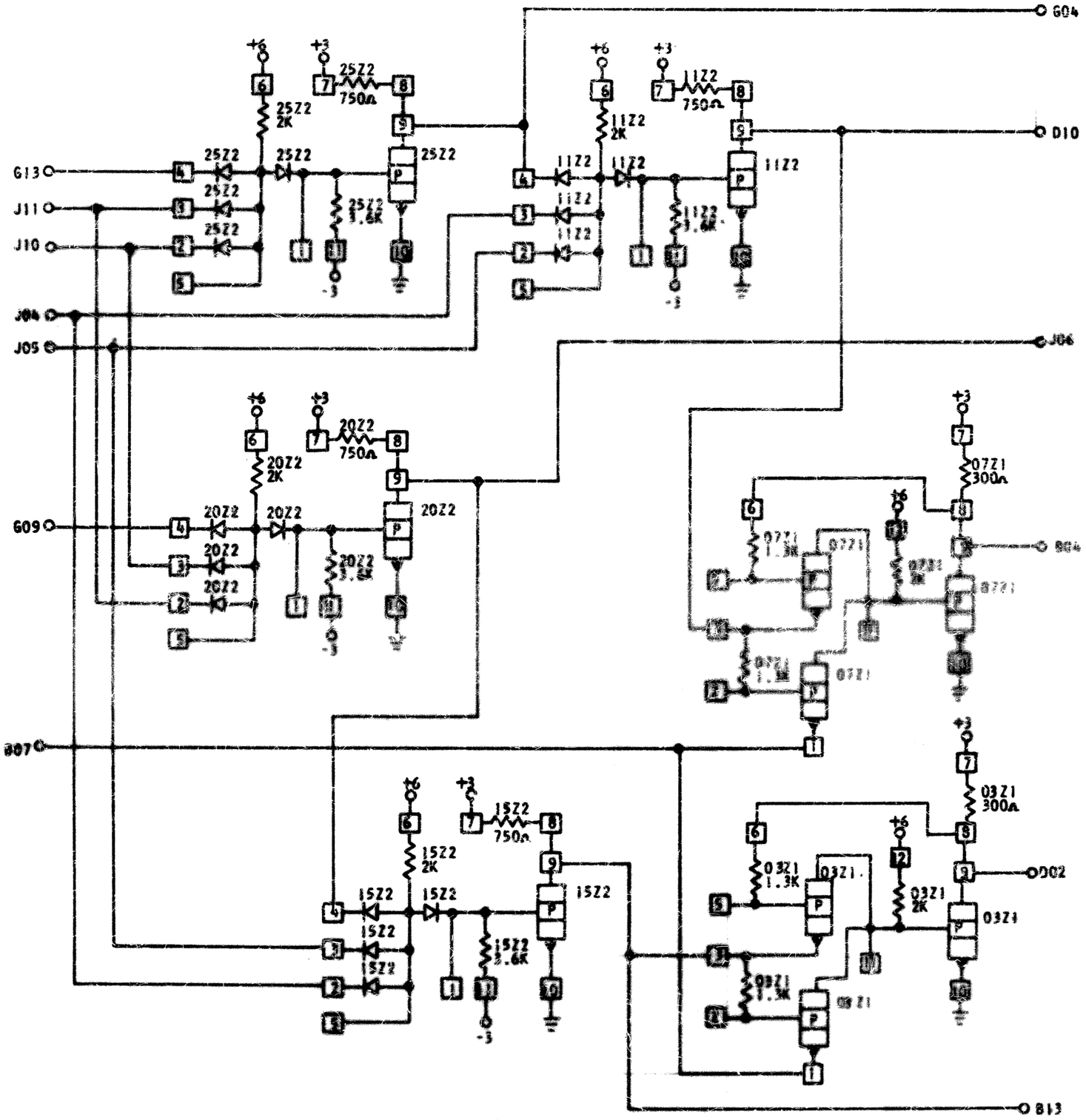

CIRCUIT AND PACKAGING STANDARD	
APPROVAL	DATE

	DATE	CHANGE NO.	APPROVAL	DATE	CHANGE NO.	APPROVAL	DEVELOPMENT NO.
[illegible] FLIP-FLOP LATCHES	8-12-64	16126					SS461
[illegible] 2841							
[illegible]							5804283

5804283

C