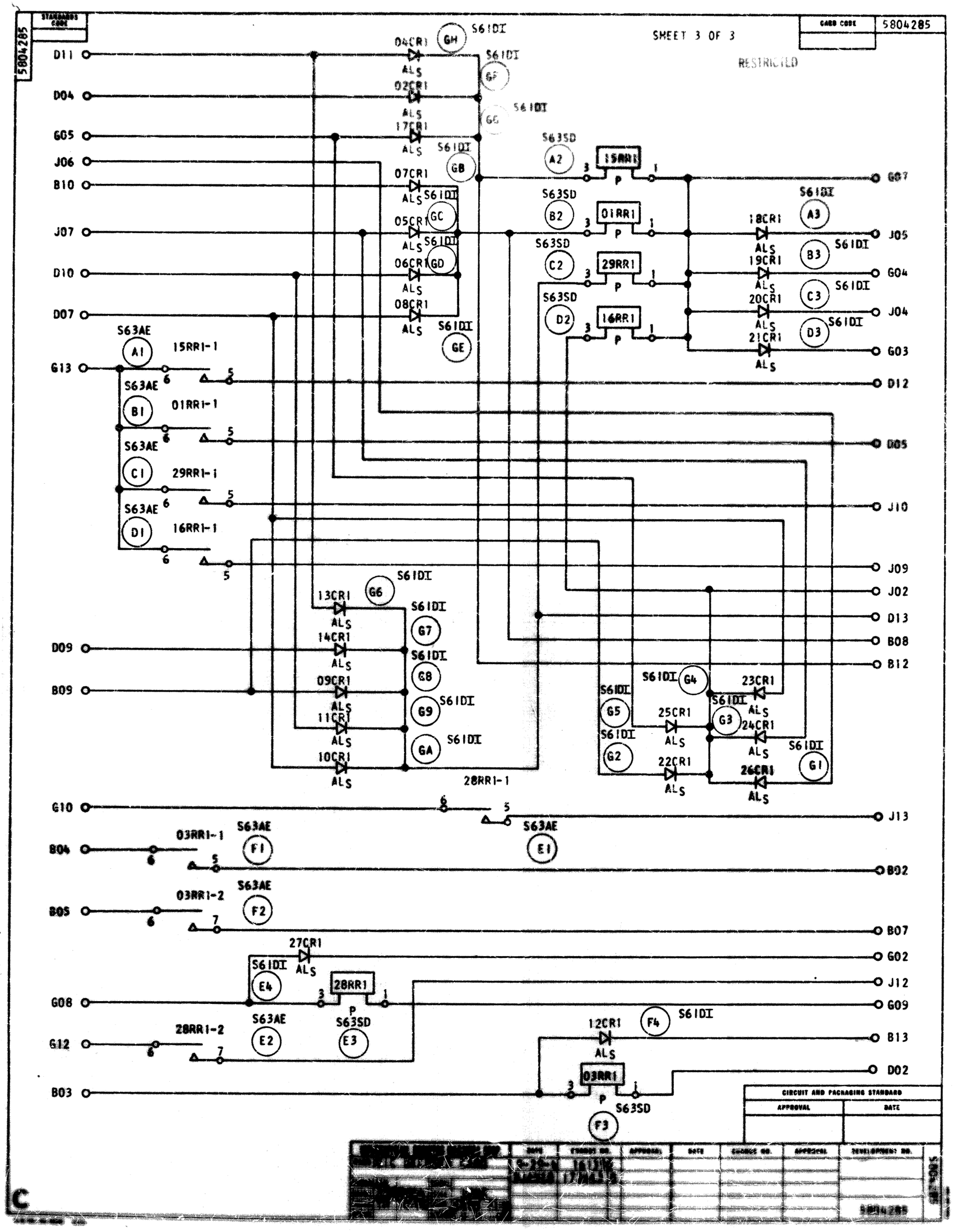
5804285
SHEET 3 OF 3
RESTRICTED
CARD CODE
D11
D04
G05
J06
B10
J07
D10
D07
G13
D09
B09
G10
B04
B05
G08
G12
B03
04CR1
02CR1
17CR1
07CR1
05CR1
06CR1
08CR1
15RR1
01RR1
29RR1
16RR1
18CR1
19CR1
20CR1
21CR1
15RR1-1
01RR1-1
29RR1-1
16RR1-1
13CR1
14CR1
09CR1
11CR1
10CR1
28RR1-1
23CR1
25CR1
24CR1
22CR1
26CR1
03RR1-1
03RR1-2
27CR1
28RR1
28RR1-2
12CR1
03RR1
G07
J05
G04
J04
G03
D12
D05
J10
J09
J02
D13
B08
B12
J13
B02
B07
G02
J12
G09
B13
D02
CIRCUIT AND PACKAGING STANDARD
APPROVAL
DATE