5804291

STANDARDS CODE

RESTRICTED

CARD CODE 58

SHEET 3 OF 3

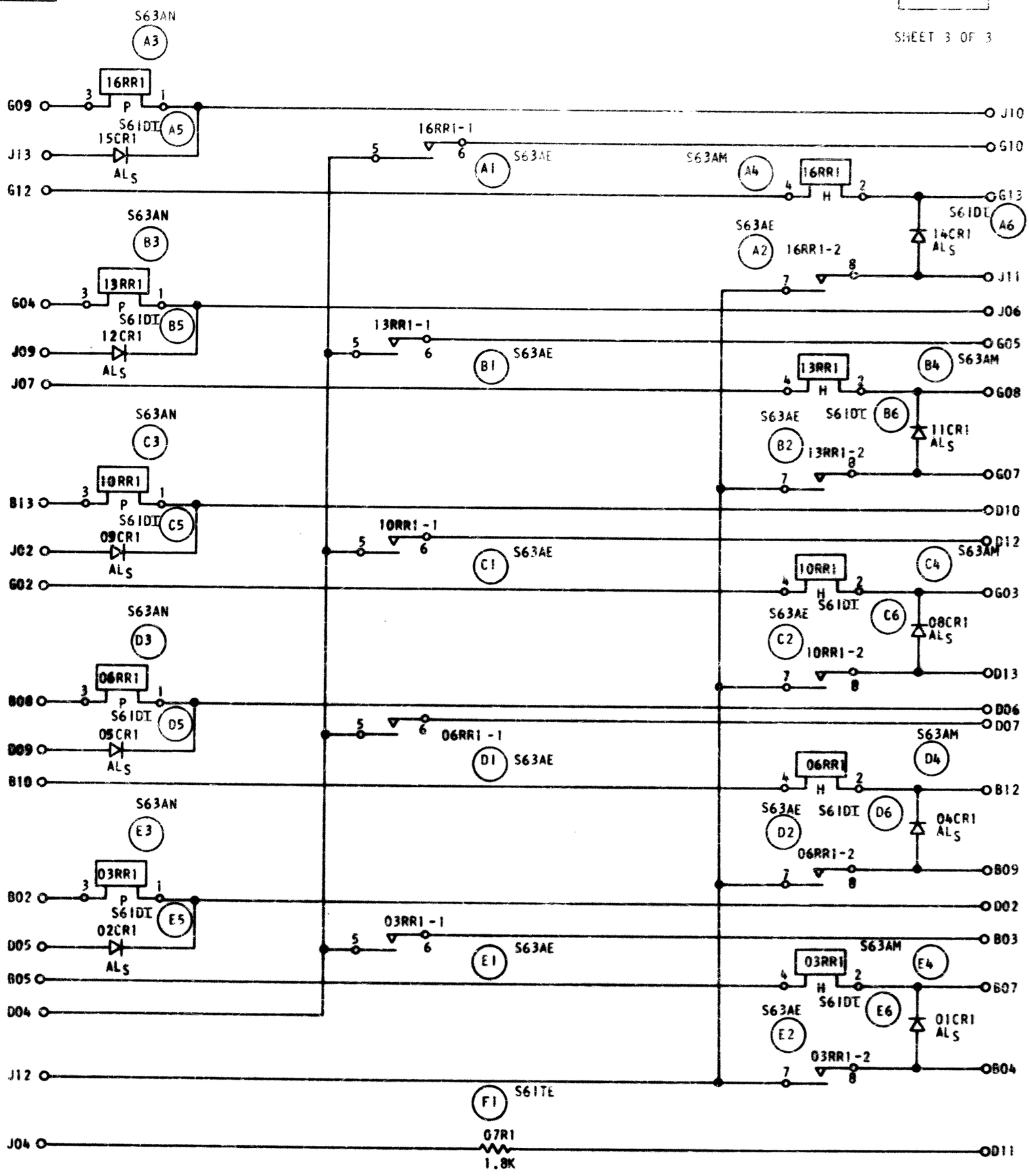

CIRCUIT AND PACKAGING STANDARD	
APPROVAL	DATE

INTERNATIONAL BUSINESS MACHINES CORP.	DATE	CHARGE NO.	APPROVAL	DATE	CHANGE NO.	APPROVAL	DEVELOPMENT NO.	5804291
NAME DATA RELAY CARD	10-28-68	161429						
	5JAN68	172665 B					SS482	
DESIGN W.K. 8-1-68 MODEL								
DETAIL EDD 9-29-68 SCALE NONE								
CHECK TN 9-30-68 DRAW EDD 9-29-68							5804291	
APPRO CHECK TN 9-30-68								

C