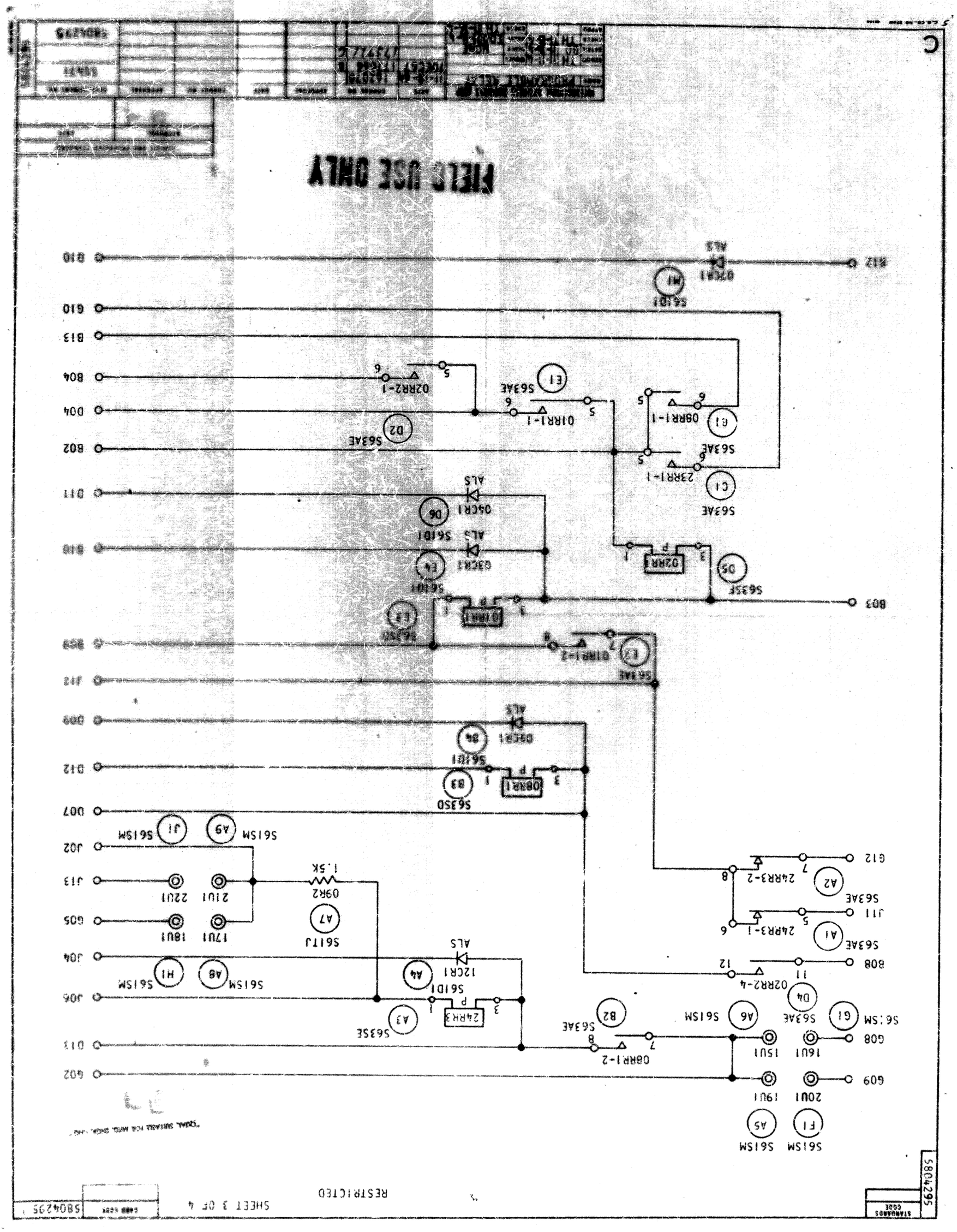
FIELD USE ONLY
RESTRICTED
SHEET 3 OF 4
5804295
STANDARDS CODE
C