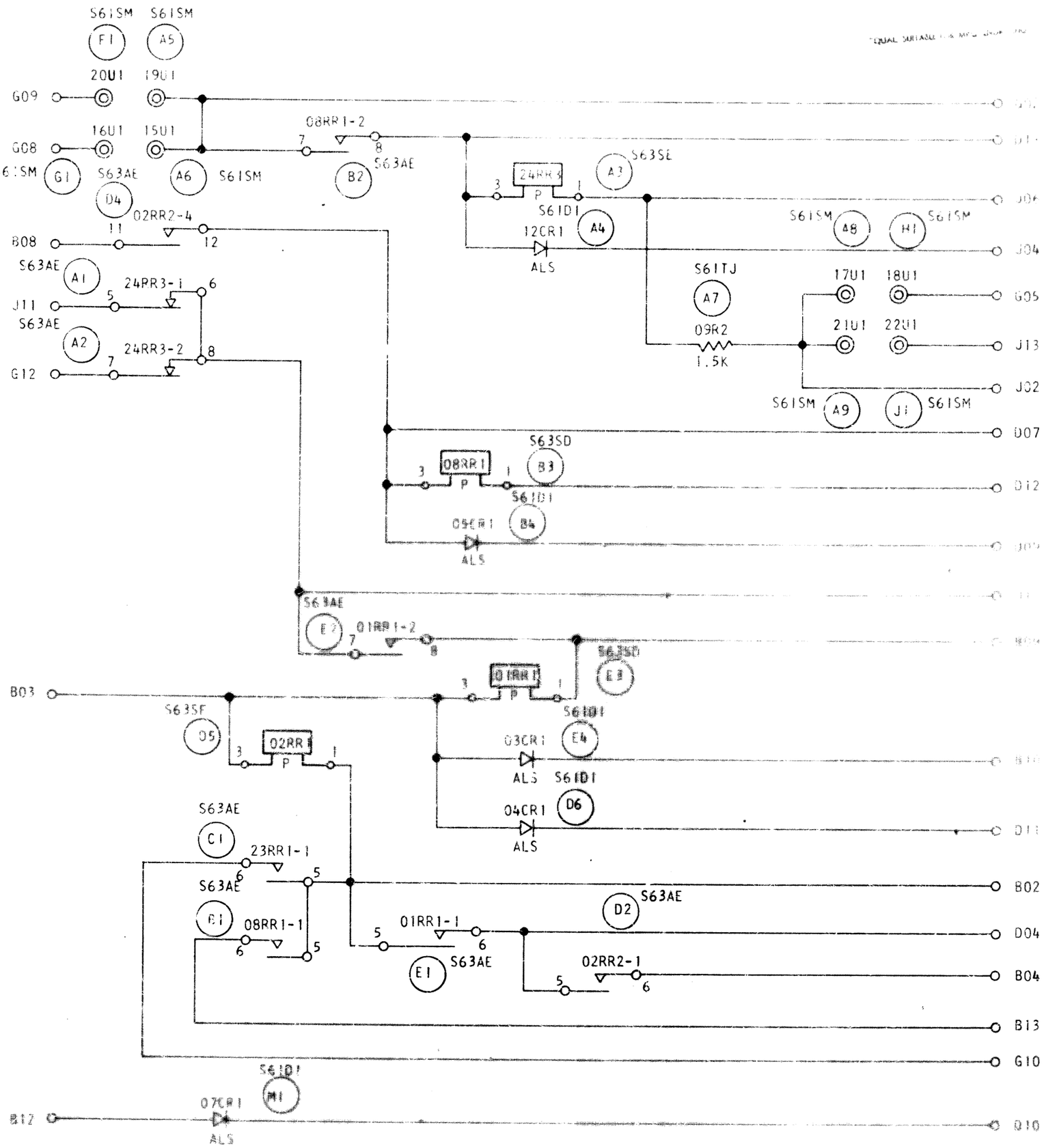

FIELD USE ONLY

PROGRAMMABLE RELAY	11-18-64	160078					
	20DEC67	172266	B				
		173722	C				
							55471
							5804295

C