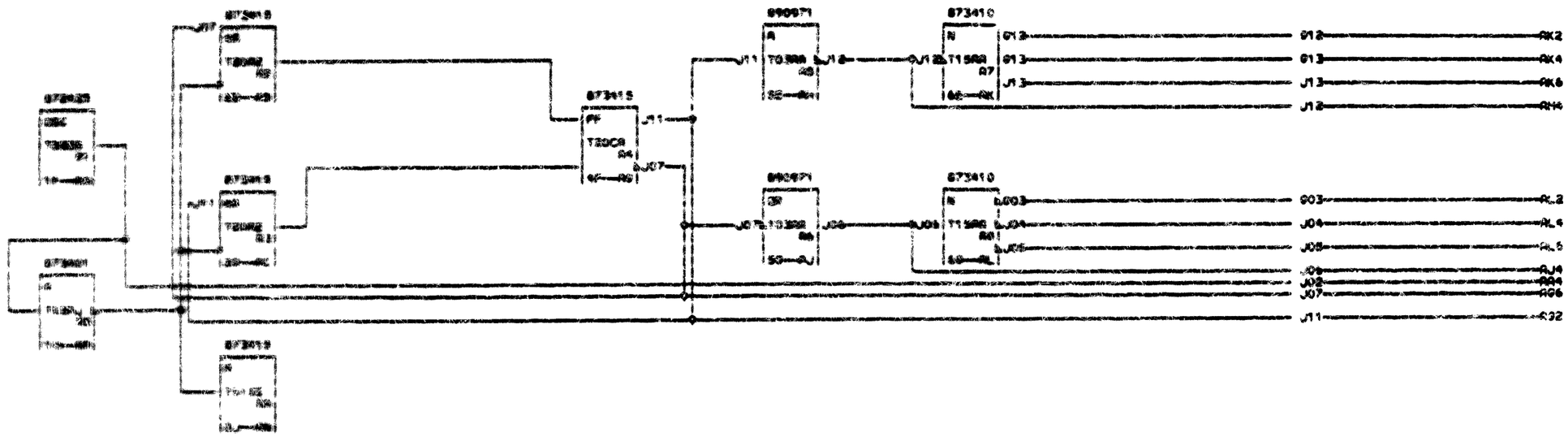

CARD SIZE0 3-24 PRC
VOLTAGE PINS
4 +6VOB:10011 +3V
3 -3VOB060606
3 SPECIAL RESTRICTED
1 *TEST CARD TO ENG SPEC
1

000

RESTRICTED

2 RC OSCILLATOR

DATE 03-19-65 RACH. ASSEMBLY

LOG 0704 FRAME

J T P P.N. 5804331

IBM CORP. EM BLK. GP

000