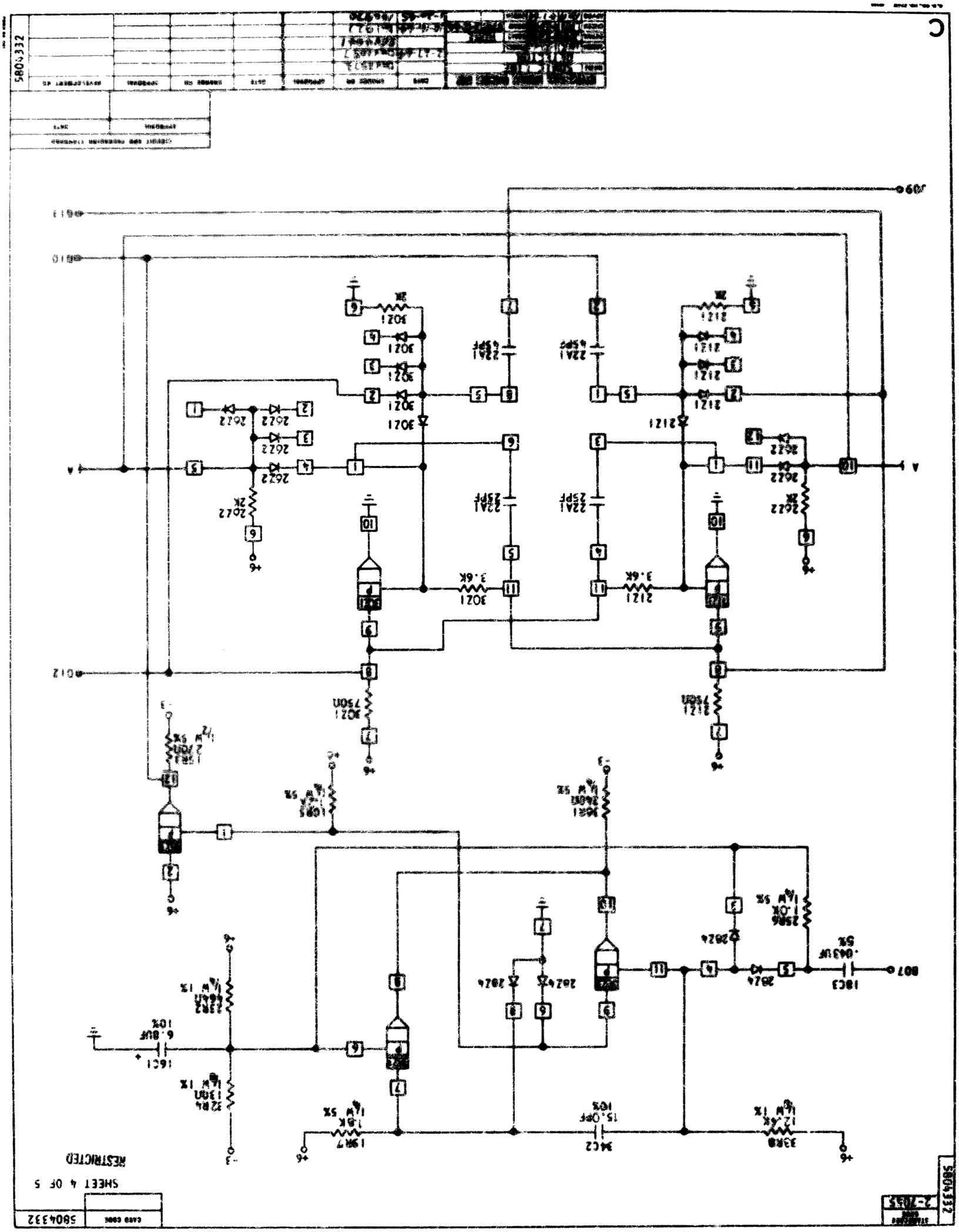
RESTRICTED
SHEET 4 OF 5
5804332
CARD CODE
2-7055
5804332
3302
1.5K
1/4W 5%
1R3
2.7ΩΩ
1/2W 5%
2R2
68Ω
1/4W 1%
22R4
130Ω
1/4W 1%
1C1
6.8UF
10%
1R7
1.8K
1/4W 5%
3R3
12.4K
1/4W 1%
3C2
15.0PF
10%
2Q24
2Q24
2Q24
2Q24
1C3
.043UF
5%
2R6
1.0K
1/4W 5%
3R1
240Ω
1/4W 5%
1R1
2.7ΩΩ
1/2W 5%
1R5
1.0K
1/4W 5%
3Q21
750Ω
2Q22
2K
2Q22
2Q22
2Q22
2Q22
2Q22
2Q22
3Q21
3Q21
3Q21