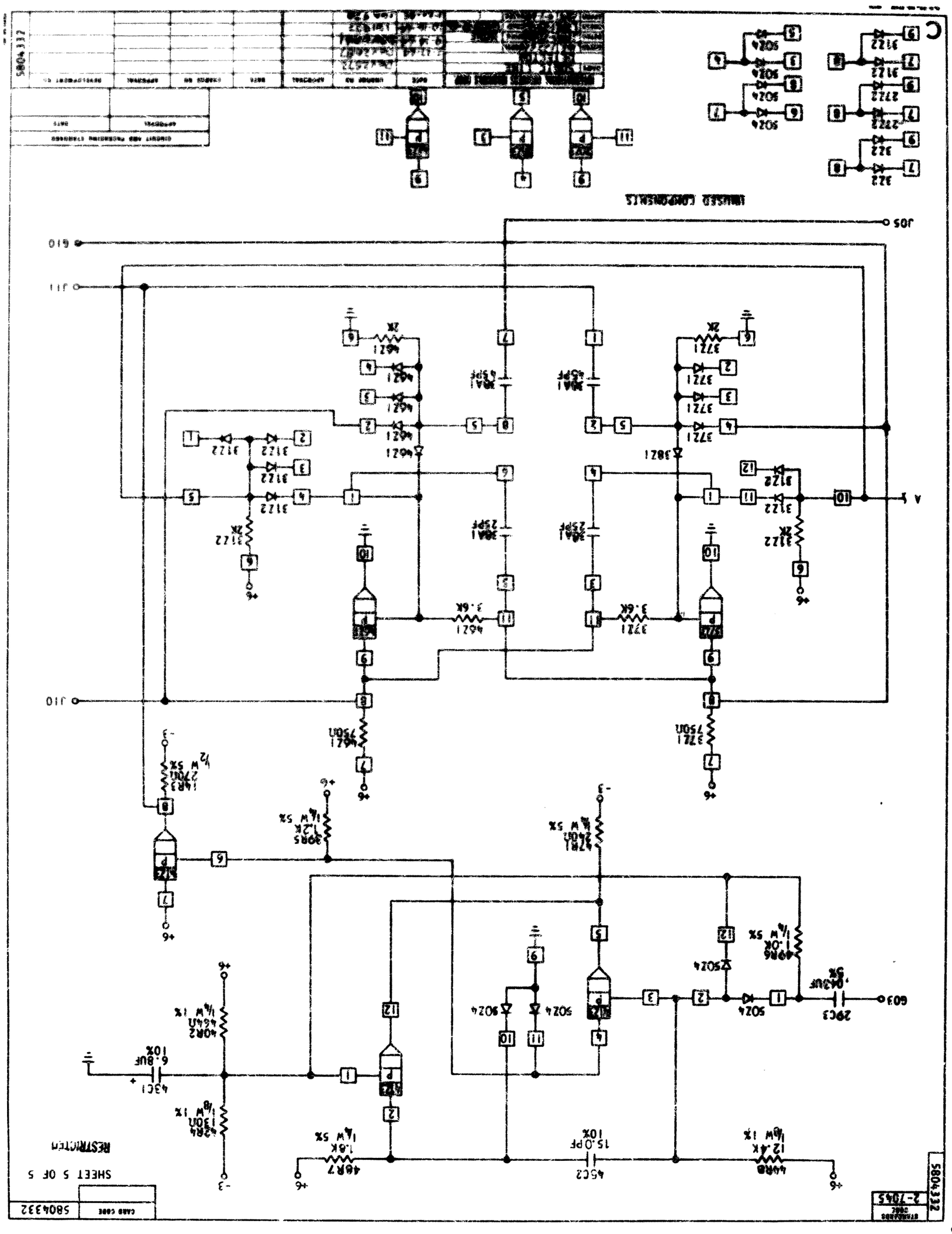
SHEET 5 OF 5
RESTRICTED
CAGE CODE
5804332
2-7045
STANDARDS CODE
5804332
IMPRESS COMPONENTS
J10
J11
J05
J03
+6
-3
4R7
1.6K
1/4W 5%
4C2
15.0PF
10%
4R8
12.4K
1/8W 1%
4R4
130Ω
1/8W 1%
4R2
464Ω
1/8W 1%
4C1
6.8UF
10%
2R5
1.2K
1/4W 5%
1R3
270Ω
1/2W 5%
4R1
750Ω
3.6K
2R1
2R2
2C1
25PF
2C3
.0432UF
5%
4R6
1.0K
1/4W 5%
4R1
240Ω
1/4W 5%
3R1
3R2
3C1
45PF
3R1
750Ω
3.6K
3R2
3R3
3C2
25PF
3C3
.0432UF
5%
3R4
1.0K
1/4W 5%
3R5
240Ω
1/4W 5%
3R6
1.2K
1/4W 5%
3R7
750Ω
3.6K
3R8
3R9
3C4
25PF
3C5
.0432UF
5%
3R10
1.0K
1/4W 5%
3R11
240Ω
1/4W 5%
3R12
1.2K
1/4W 5%
3R13
750Ω
3.6K
3R14
3R15
3C6
25PF
3C7
.0432UF
5%
3R16
1.0K
1/4W 5%
3R17
240Ω
1/4W 5%
3R18
1.2K
1/4W 5%