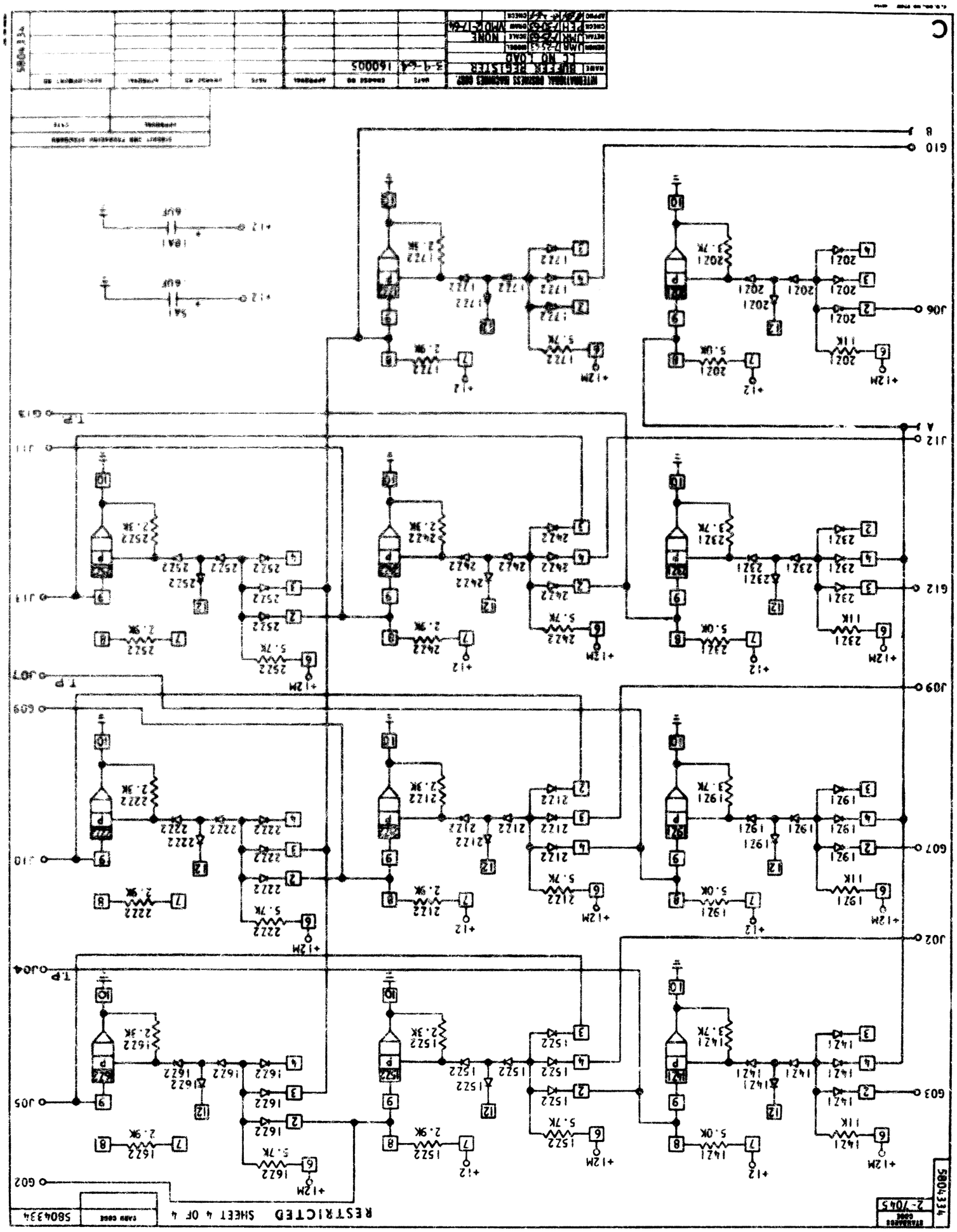
INTERNATIONAL BUSINESS MACHINES CORP.
BUFFER REGISTER
LC NO LOAD
3-9-64
16005
UMA 7-25-63
UMR 7-25-63
NONE
PEH 7-30-63
MMD 6-17-64
RESTRICTED
SHEET 4 OF 4
5804334
2-7045
J06
J12
J13
J11
J07
J09
J10
J04
J05
J02
J03
J01
J08
+12M
+12
5.0K
5.7K
2.9K
2.3K
3.7K
11K
5A1
6UF
1A1
TP