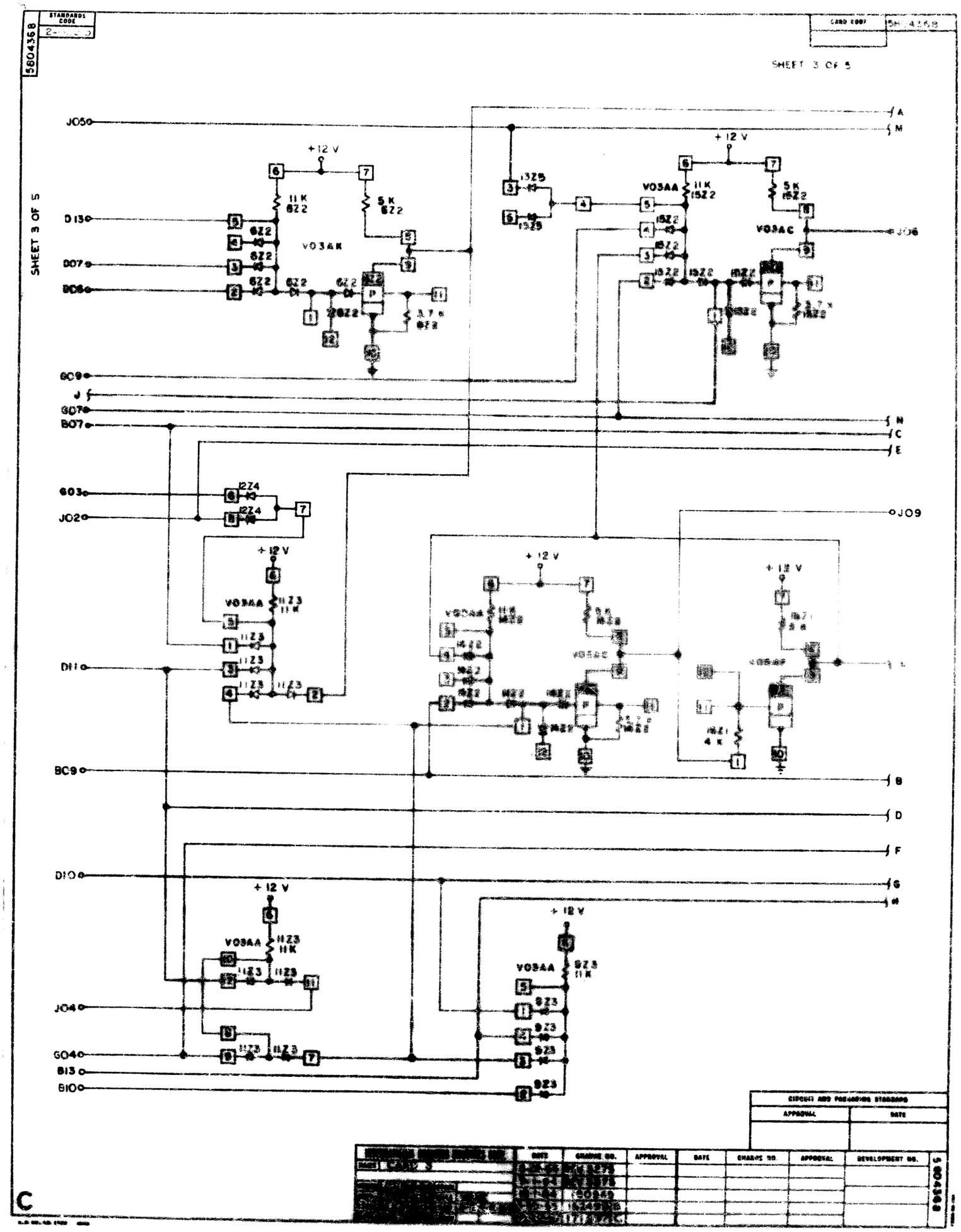
5804368
STANDARDS CODE
CARD CODE
SHEET 3 OF 5
SHEET 3 OF 5
JO5
+12 V
11K 8Z2
5K 8Z2
V03AK
D13
D07
BO6
6Z2
20Z2
3.7K 8Z2
13Z5
V03AA 11K 15Z2
5K 15Z2
V03AC
JO6
15Z2
15Z2
3.7K 15Z2
BC9
J
GO7
BO7
A
M
N
C
E
GO3
JO2
12Z4
JO9
V03AA 11Z3 11K
11Z3
D11
BC9
B
D
F
D10
G
H
JO4
GO4
B13
B10
9Z3 11K
9Z3
C
CIRCUIT AND PREFERRED STANDARD
APPROVAL
DATE
DATE
CHANGE NO.
APPROVAL
DATE
CHARGE NO.
APPROVAL
DEVELOPMENT NO.
5804368