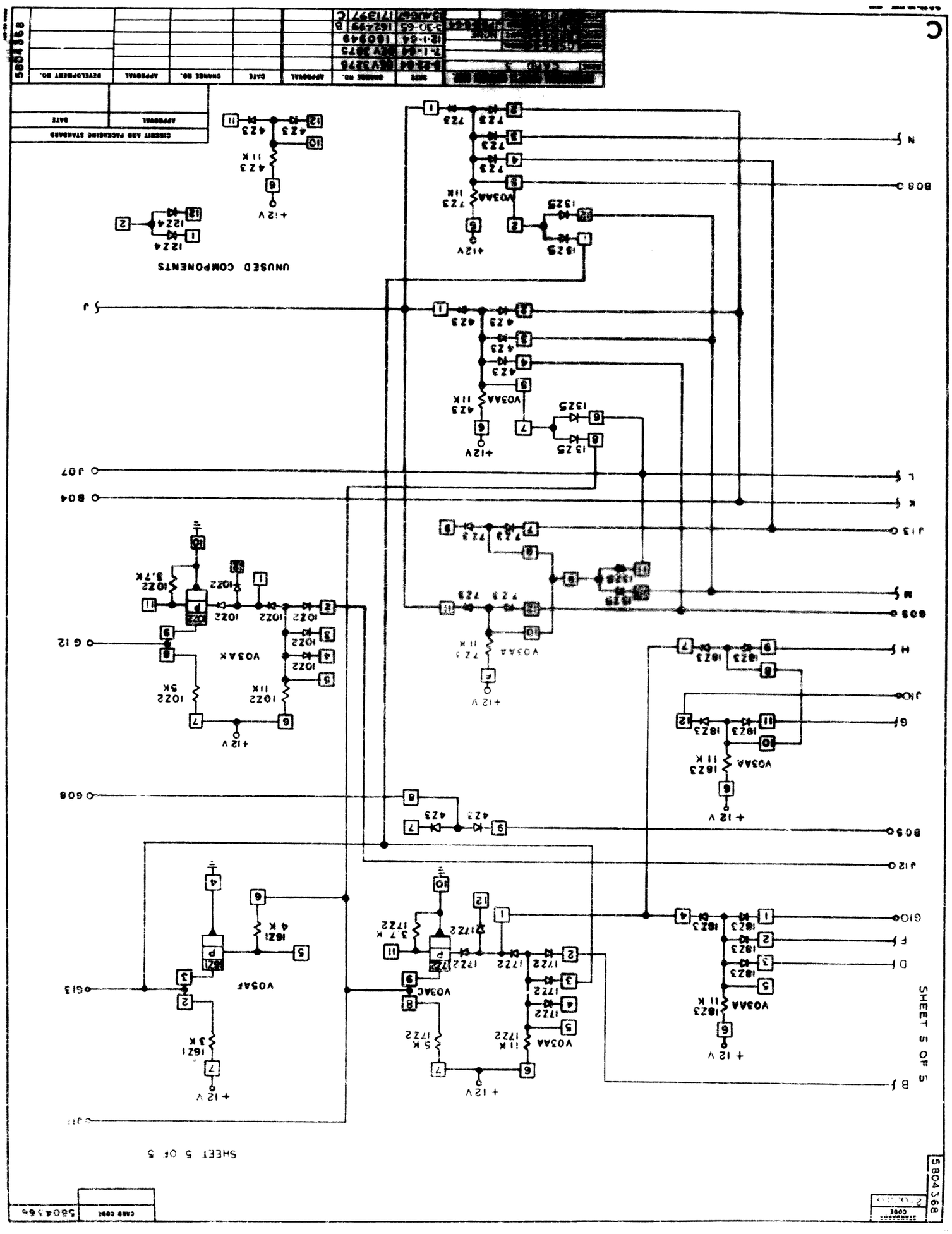
SHEET 5 OF 5
UNUSED COMPONENTS
CIRCUIT AND PACKAGING STANDARDS
APPROVAL
DATE
CHANGE NO.
DEVELOPMENT NO.
5804368
CASE CODE
STANDARD CODE
C
B
J
N
K
L
M
H
G
F
D
J10
J12
J13
B08
B09
B03
B04
J07
G08
G12
G13
G10
J11
+12V
V03AA
V03AB
V03AC
V03AF
V03AX